NAVAL POSTGRADUATE SCHOOL
Monterey, California

THESIS

A PROTOTYPE MULTI-MEDIA DATA BASE FOR TRACKING INTERFACE RELATIONSHIPS AND PERFORMING COST TRADEOFFS FOR THE SEA LAUNCH AND RECOVERY (SEALAR) SPACE LAUNCH SYSTEM

by

Joseph F. Mark

September 1991

Thesis Advisor Michael Melich

Approved for public release; distribution is unlimited.

T254628

Unclassified

Security Classification of this page

REPORT DOCUMENTATION PAGE

1a Report Security Classification Unclassified	1b Restrictive Markings
2a Security Classification Authority	3 Distribution Availability of Report Approved for public release; distribution is unlimited.
2b Declassification/Downgrading Schedule	
4 Performing Organization Report Number(s)	5 Monitoring Organization Report Number(s)
6a Name of Performing Organization Naval Postgraduate School	6b Office Symbol *(If Applicable)* 39
7a Name of Monitoring Organization Naval Postgraduate School	
6c Address *(city, state, and ZIP code)* Monterey, CA 93943-5000	7b Address *(city, state, and ZIP code)* Monterey, CA 93943-5000
8a Name of Funding/Sponsoring Organization	8b Office Symbol *(If Applicable)*
9 Procurement Instrument Identification Number	
8c Address *(city, state, and ZIP code)*	10 Source of Funding Numbers

Program Element Number	Project No	Task No	Work Unit Accession No

11 Title *(Include Security Classification)* A Prototype Multi-Media Data Base for Tracking Interface Relationships and Performing Cost Tradeoffs for the Sea Launch and Recovery (SEALAR) Space Launch System

12 Personal Author(s) Mark, Joseph F.

13a Type of Report Master's Thesis	13b Time Covered From To	14 Date of Report *(year, month,day)* 1991 September	15 Page Count 106

16 Supplementary Notation The views expressed in this thesis are those of the author and do not reflect the official policy or position of the Department of Defense or the U.S. Government.

17 Cosati Codes

Field	Group	Subgroup

18 Subject Terms *(continue on reverse if necessary and identify by block number)*
Object-Oriented, Event Driven, Multi-Media, HyperCard, SEALAR

19 Abstract *(continue on reverse if necessary and identify by block number*

This thesis develops a prototype multimedia database from which interface relationships and cost tradeoffs in the early stages of development of the Sea Launch and Recovery System (SEALAR) program can be rapidly and easily explored and evaluated. This prototype is developed employing HyperCard/Macintosh and demonstrates the feasibility of employing off-the-shelf technology to solve real world problems. The goal of attaining a cost effective system for access to space is thereby enhanced and brought one step closer to reality. Implementation issues are discussed and evaluated along with possible future enhancements to the model.

0 Distribution/Availability of Abstract ☒ unclassified/unlimited ☐ same as report ☐ DTIC users	21 Abstract Security Classification Unclassified	
2a Name of Responsible Individual Dan C. Boger	22b Telephone *(Include Area code)* (408) 646-2607	22c Office Symbol OR/Bo

D FORM 1473, 84 MAR 83 APR edition may be used until exhausted

All other editions are obsolete

security classification of this page

Unclassified

Approved for public release; distribution is unlimited.

A Prototype Multi-media Data Base for Tracking Interface Relationships and Performing Cost Tradeoffs for the Sea Launch and Recovery (SEALAR) Space Launch System

by

Joseph F. Mark
Commander, United States Navy

B.S., United States Naval Academy, 1976

Submitted in partial fulfillment of the
requirements for the degree of

MASTER OF SCIENCE IN SYSTEMS TECHNOLOGY
(SPACE SYSTEMS OPERATIONS)

from the

NAVAL POSTGRADUATE SCHOOL

ABSTRACT

This thesis develops a prototype multimedia database from which interface relationships and cost tradeoffs in the early stages of development of the Sea Launch and Recovery System (SEALAR) program can be rapidly and easily explored and evaluated. This prototype is developed employing HyperCard/Macintosh and demonstrates the feasibility of employing off-the-shelf technology to solve real world problems. The goal of attaining a cost effective system for access to space is thereby enhanced and brought one step closer to reality. Implementation issues are discussed and evaluated along with possible future enhancements to the model.

TK0515
M34276
c.1

TABLE OF CONTENTS

I. INTRODUCTION 1
A. PURPOSE 1
B. STRUCTURE 2
C. HISTORICAL PERSPECTIVE 3
II. CONCEPT AND DEVELOPMENTAL HISTORY 10
III. THE PROGRAMMING ENVIRONMENT: HYPERCARD 22
IV. APPLICATION AND IMPLEMENTATION 30
V. ANALYSIS AND CONCLUSIONS 33
REFERENCES 35
APPENDIX A: SEALAR STACK 37
APPENDIX B: DEVELOPERS SCRIPTS 52
APPENDIX C: X-3 VEHICLE DESCRIPTION 80
APPENDIX D: COST SPREADSHEETS 91
BIBLIOGRAPHY 94
INITIAL DISTRIBUTION LIST 95

ACKNOWLEDGMENTS

I would like to thank my advisor, Professor Michael Melich, for his guidance and encouragement over the past few months. His creative ideas and enthusiasm were always available. The help of Professors Dan Boger and Donald Lacer have as well been invaluable to me. I have learned a great deal in working with both of them. I feel honored that they have taken the time to carefully read my thesis and provide many useful comments, helpful suggestions, sound advice and continued support throughout my studies.

I also wish to express my thanks to Ginny Scout for her careful editing, formatting and typing of this manuscript.

The greatest thanks go to my wife and family who have continually and enthusiastically encouraged me throughout this endeavor.

I. INTRODUCTION

In America, "No natural boundary seems to be set to the efforts of man; and in his eyes what is not yet done is only what he has not yet attempted to do."

Alexis de Tocqueville

A. PURPOSE

This thesis was produced with the objective of illustrating an innovative method for the tracking of interface relationships and cost tradeoffs in a midsized research and development program. The Sea Launch and Recovery System (SEALAR) was selected to be modeled because it is presently in the early stages of development and is the type of program which readily lends itself to be analyzed via a multimedia type database, in this case, Machintosh HyperCard®. The overall objective is to focus the reader's attention on the method of presentation and the flexibility and potential of the program employed.

The decision to use HyperCard, a trademark of Apple Computer Incorporated, was based upon several factors. Specifically, HyperCard's object-oriented properties support ease of development, portability and reusability of modules. These characteristics are enhanced by the ability of HyperCard to link to modules within itself or to other programs. These aspects of the program will be discussed later. In addition, these same object-oriented capabilities provide the developer with a rapid, interactive prototype environment that greatly enhances debugging and ultimately results in a program that has significantly increased robustness over that offered in other conventional programming environments.

HyperCard provides the developer with a significant degree of flexibility and power, and a rich set of development tools and options. When combined, these establish a degree of compatibility and cognitive richness found in few other programing environments. The human factors engineering and human interface technology found within the Macintosh operating system have been extended into HyperCard. These features allow the developer to easily acquire, manipulate and import text, sound and graphics into HyperCard without data conversion.

To demonstrate the viability of a multimedia data base employed in such an application, the SEALAR X-3 rocket was selected. Due to limited time and resources, this initial implementation was aimed primarily toward the prototype's propulsion system. However, it must be noted that this program is not designed to demonstrate applicability of a specific function, rather its purpose is to validate the integration possibilities across the entire functional spectrum of the SEALAR program.

B. STRUCTURE

The thesis is organized into five sections. The first section is essentially a political statement and assessment of where we are, how we got here, what avenues we are likely to pursue as a nation with regard to space utilization and exploration in the future, and what are the primary motivations and drivers of this process.

The second section, background, contains a brief history of development of the water launch concept, including a summary of the Hydra and Sea Dragon projects completed in the early 60's, the ancestors of the SEALAR concept.

Within the third section, programming environment, a brief overview is presented of the employment of HyperCard and an explanation of the object-oriented programming environment. It also includes a discussion of programming language features and capabilities.

The fourth section, application, the application, explains how the program was built and how to manipulate the stack and its numerous features. Within it is an explanation of the programs required to be installed on the computer in order to run the program and detailed instructions of how to operate it.

Finally, the analysis and conclusion section gives an explanation of what the employment of HyperCard programming could offer a program like SEALAR in terms of the ability to track the interface relationships between components of both off-the-shelf and custom engineered components, and the unique ability to quickly and objectively compare specification and costing tradeoffs with minimal effort and reasonable reliability. Implementation issues are discussed and evaluated. Future enhancements to the program are also discussed.

C. HISTORICAL PERSPECTIVE

Man's inevitable quest for knowledge and adventure in the exploration and utilization of space cannot be satisfied solely by the use of machines and robots, as recently proposed by some scientists and members of Congress. This is not to say that robots cannot play important roles in helping define and shape the environments in which we will travel and live in the future, and in acting as sentinels carefully placed along the way in advance of manned missions. However, in order to make these dreams of today a reality tomorrow, we require a system offering reliable and cost effective access to space.

In historical perspective, machines have never been used solely for the exploration of the earth and its many environments. Whether the objective was the conquest of the outer reaches of the atmosphere or the vast depths beneath the surface of the world's oceans, machines might have gotten there first but men were never far behind. Machines lack the innate ability to comprehend the unknown, i.e., they can only inform us about physical quantities that we already are aware of. Of course they can quantify and analyze these known parameters more accurately and efficiently than a human. Therein lies both their utility and primary limitation. The conquest of space must be made by manned vehicles in conjunction with unmanned space probes.

We humans have made great strides in our initial exploration of space: the Apollo program, landing the first man on the Lunar surface and returning him safely to the earth; the Soyuz program, having a man spend 237 continuous days in space; and the Voyager program, a pair of unmanned space probes which explored the outer planets of our solar system, to name only a few. However, when compared to the timeline of aviation, which in many respects, was a similar development process, we find that space exploration is indeed still very young. Aviation had its beginnings with the Wright brothers first flight at Kitty Hawk, North Carolina in 1904. In comparison the first terrestrial instrument or probe, Sputnik, was placed in orbit in October 1957 by the Soviet Union, 34 years ago. Employing some simple arithmetic we find that if we add this figure to aviation's birth date of 1904, the result is 1938. Clearly, aviation was undergoing rapid advances at this point, but was still very young, with many highly significant improvements to be made in the next 53 years to bring us to the present. Thus it can be said with some confidence that space exploration is still in its infancy.

There is, however, one singular difference between the development of aviation as an industry and space as an industry. The development of the aviation industry, to a great extent, was performed by individuals and companies and was financed substantially with funds derived from the private sector. Even given the increased military importance attributed to aviation in the post WW I era, the private sector was to be the motivating force that was to keep aviation moving forward. The military, up until the beginning of WW II, had not begun a credible and substantial development program for the sole purpose of developing military aircraft.

The above occurred because of several reasons. One was the relatively low cost of initial development of the airplane. The Wright brothers spent relatively little capital and a substantial amount of time in constructing their first aircraft. Another was the excitement and thrill of breaking records, of being the fastest or having flown the highest. During the 20's and 30's, individuals seeking to make substantial contributions to an infant industry were eager and willing to risk resources, time and, in some cases, even their lives. These achievements were recognized by numerous awards and trophies on both sides of the Atlantic and were given with increasing regularity in the early to mid 20th century. Last, and perhaps the most important, was the fact that enterprising individuals and companies with foresight and vision recognized the potential for realizing a profit from an initial investment.

In contrast, the development of the space industry has been, to a great extent, left in the hands of governments. The two primary reasons for this include, one, the relatively rapid realization by the military establishments of the world of the tactical and strategic applications of space vehicles and hardware, and two, the substantial cost required to develop, build, and launch space vehicles and hence to support a viable space program. While these reasons seemed valid and consistent for several decades, the paradigm in the early 90's now has begun to change. The world community has now largely acknowledged by consensus the end of the Cold War between the two superpowers. The American public has voiced increasing demands upon the US government to significantly reduce deficit spending and to increase support and funding for domestic programs. In the case of the Soviet Union, its public demands the substantial reform of the bureaucratic form of government, a reversal of the trend of deterioration of their already stagnant economy, and a move toward an open market system interacting freely with Europe and the West.

As a direct result of the above factors, the trend is toward a reduction of the governmental control and subsidization of the space industry within the United States and the Soviet Union. This ultimately means that once again the private sector must be encouraged to bear the burden and take the required risks if we are to continue to explore and develop our understanding of space. However, because of the tremendous cost involved, this cannot happen of its own accord. The governments, endorsed by bold and strong political leaders of the world, must support and nurture this fledgling industry, at least until it gains sufficient momentum and becomes a going enterprise, i.e., until it becomes profitable. In retrospect, had H. G. Wells fictional Baltimore Gun Club been a reality, and if its visionary members possessed the enormous capital required to develop and test a space vehicle, the world could have been vastly different today.

As the decade of the nineties begins and we look toward the 21st century several important trends become evident. One, economies around the world are being restructured, primarily as a result of failed ideologies and of excessive deficit spending, both factors ultimately resulting in recession and economic stagnation. These realities will presumably lead to an altered global power structure based upon economics rather than strictly military prowess and might. World leaders will increasingly be compelled to recognize that in conjunction with this power comes the burden of accountability. While U.S. leaders have to some degree had to deal with this factor in recent years, other world leaders will find this a new and often annoying challenge. As a direct result of technological advances in the field of communications and travel in the last twenty years, news events and advertising have developed an informed and educated public and constituency. World leaders will be increasingly held accountable for their actions and decisions, many of which may well have long term effects upon our global environment, as well as short term impacts upon regional economies.

Another important trend of the 90's will involve space. Its exploration, exploitation, and conquest will ultimately become dominant factors in defining our future and will hold the keys to our destiny. The realities of this statement will become increasingly evident as the decade unfolds. The earth provides only limited and inequitably distributed resources upon and beneath its surface. Scientists and environmentalists now acknowledge the perceptible and increasingly evident deterioration in the quality of our air and water. This sequence of disturbing events is occurring primarily as a result of the increasingly rapid exploitation and utilization of these finite resources. In the not so distant future, the use of extraterrestrial sources of power and raw materials may be not only economically prudent and advantageous, but the ultimate survival of the human species might well come to depend upon it.

The rules and paradigms have changed with regard to advancing technology and space exploration. Where deficit spending was the norm in the late 70's and 80's, and where excessive funding was ultimately available when required and not an insurmountable problem, the systems designed and built to date largely reflect this fundamentally flawed policy. Now, largely because of economic necessity and the lack of strong public support, we are compelled to rethink and redesign our programs, systems and hardware and attempt to achieve previously established goals within this now constrained economic environment.

As we plan, develop and prepare to launch our third generation earth sensing platforms and space probes, it is very likely that they will be significantly different from their predecessors in several aspects: they will be the result of significantly more international cooperation and funding; they will reflect the economic conditions and realities within which they were conceived; they will likely be smaller and lighter, and inasmuch as possible be multifunctional in their capabilities. Additionally, they will be placed into space by a new generation of cost effective launch vehicles.

With the question of cost ultimately driving the whole issue of how and with what vigor a space program is to be pursued, it becomes evident that the major factors that drive cost must be fully understood and optimized. This question is not new. During the last of the Apollo missions in the early 1970's, forward looking individuals and planners had recognized that fiscal constraints would increasingly affect the U.S. space program. In the following excerpt from a Navy Space Systems Activity report, the answer to the cost dilemma was as follows:

> The existing launch systems are very expensive to operate because their hardware is completely expended during each single mission - the present cost per pound of payload delivered to low Earth orbit is on the order of \$800 to \$1000 (FY 73). Economic considerations demand, and the experience gained during the first fifteen years of space flight makes it possible, to develop a reusable Space Transportation System for a vigorous continuation of space exploration during the next decade and beyond.
>
> The development of the reusable Space Transportation System signals the end of the initial "brute force" period. Space flight operations will become to a large degree routine, like those of intercontinental airlines. Payload delivery costs to low Earth orbit will be reduced by the Space Shuttle to about \$150 per pound initially, and later to about \$100 per pound. The tremendous impact of the new Space Transportation System on Ground Operations including Range Safety, Communication, Reentry, Recovery and Retrieval will also be significantly reduced.[Ref. 1]

While the motivation and intent of the Space Shuttle concept was undisputably in the right direction, several elements ultimately leading to the failure to reach its cost objectives should be discussed. The Space Shuttle from its conception was to be a man-rated system. This factor in and of itself required extraordinarily high reliability, one of the primary cost drivers of such a space system. Secondly, the employment of numerous leading edge technologies throughout the system, some of which were not even through the research and development stage at its conception, contributed great uncertainty and unforeseen technological challenges, ultimately leading to a significantly higher than estimated final system cost. Lastly, the cost of direct support, turnaround and refurbishment, and bureaucratic support were not accurately estimated nor maintained within reasonable bounds. "The Space Shuttle system has ended up being extremely expensive to maintain and launch."[Ref. 2]

By the mid 1980s, when the bills began to arrive in Congress, inquiring minds wanted to know if there was a better, more cost efficient system. Specifically, the House Committee on Science, Space, and Technology, and the Senate Committee on Commerce, Science, and Transportation requested and funded an assessment of available space transportation technologies. The broad realization was clearly that:

> . . . low-cost transportation is one of the keys to more efficient exploration and exploitation of outer space. If space transportation costs were much lower, government agencies and private firms with good ideas for using the space environment might be more willing to risk their investment capital.[Ref. 3]

One plausible option was a concept which had been around for many years, and was in fact originally proposed by German missile engineers at Peenemünde, toward the conclusion of World War II. They proposed enclosing a V-2 rocket in a large cannister and launching it out of the water in a vertical position. Following the war, the U.S. Naval Missile Center at Point Mugu, California continued research in this area under the name "Project Hydra". The stated policy of such research was "to develop vertical floating launch technology, and to apply it to both long-range missiles and satellite boosters". When the project was canceled in 1965, "it was generally conceded that the feasibility of this type of launch has been proven".[Ref. 4]

Ultimately, in order to realistically fulfill mankind's needs and desires, a reliable cost effective system is required for placing materials and supplies into space. Only then will man be able to continue to explore the universe and to discover what is on the next planet or beyond the next star.

II. CONCEPT AND DEVELOPMENTAL HISTORY

The decade of the 60's was perhaps the most exciting for space exploration and development to date. The decade began with the American and Russian space programs attempting to outclass one another in the "space race." With the lead position in serious doubt, the recently elected Democratic President, John F. Kennedy, "instructed his Vice President, Lyndon B. Johnson, to work with National Aeronautics and Space Administration (NASA) and seek out ways by which the United States could overtake the Soviet Union and demonstrate a superior American technology in full view of every nation on Earth. The ambitious goal would need dedication to objectives which would demonstrate a clear cut lead for the United States. It was decided that only a manned landing on the surface of the Moon was sufficiently in advance of contemporary Soviet accomplishments to give the space agency a fighting chance of getting there before the Russians."[Ref. 5]

Consequently, on 25 May 1961, President Kennedy went before Congress and called for a massive new commitment to space exploration: "Now is the time to take longer strides - time for a great new American enterprise - time for this nation to take a clearly leading role in space achievement, which in many ways may hold the key to our future Earth. I believe that this nation should commit itself to achieving the goal, before this decade is out, of landing a man on the Moon and returning him safely to the Earth. No single space project in this period will be more impressive to mankind, or more important for the long range exploration of space; and none will be so difficult or expensive to accomplish."[Ref. 5]

During this period

> NASA was rife with optimism. The Apollo program had been authorized, and the entire country was excited about space. It was felt that a manned space station, a manned lunar base, or a manned mission to Mars would follow hard on the heels of Apollo. It was recognized, however, that not all of these missions, perhaps none of them, could be achieved unless the cost of transportation from earth to low orbit could be drastically reduced."[Ref. 6]

It was during this decade that two unique concepts were to be partially developed, which some 35 years later would provide the basis and conceptual foundations for the SEALAR program.

During the early 60's a U.S. Navy research team at the Naval Missile Center, Point Mugu, California, proposed development of techniques for launching large solid-propellant rockets from the ocean. The project, headed by Lieutenant Commanders John E. Draim and Charles E. Stalzer, came to be known as "Project Hydra." The initial concept was to attack directly the deficiencies of land-based launch and support facilities. Throughout the life of the project, "approximately sixty successful launches of rocket simulators and actual rockets confirmed the feasibility of the basic launch method--floating the rocket vertically and exhausting gases directly into the water. Shapes ranging from 3 feet to 105 feet in length, and weights of 20 pounds to more than 10 tons, have been successfully launched in this manner."[Ref. 7] Most were constructed from surplus Department of Defense and NASA assets, requiring little modification and costing little or nothing to acquire. While most tests employed solid-propellant rockets, several storable liquid rockets were also launched successfully.

> The floating-launch concept was deceptively simple. Bare, unencapsulated rockets were waterproofed and made buoyant (through design or the addition of external floats). As the rocket motor built up to full thrust, the floating rocket rose vertically from its wet pad. Once clear of the water, it was indistinguishable from any land-launched rocket. Surprisingly, tests showed that the added upward force of buoyancy actually resulted in a performance benefit over land-launched missiles.[Ref. 8]

Several important military advantages became readily apparent as the project progressed. The team found that any type of platform (i.e., ship, barge, submarine, etc.) was easily made capable of transporting and launching a rocket employing the Hydra, or vertical floating launch technique. Very large missiles could be handled with little more difficulty than was experienced with smaller ones. Finally, it was realized that an awesome concentration of firepower was possible, since any number of missiles could be launched simultaneously.

As the Hydra Project progressed, the research team at Point Mugu proposed an ambitious and extensive development plan. Since it was determined that operational and technical problems would depend upon the specific size and mission of the vehicle produced, the team grouped the proposed vehicles into four classes. Figure 1 is reproduced from the "Hydra Program Plan"[Ref. 9] and depicts the class distinctions envisioned. It also illustrates the progress completed in reaching the denoted milestones.

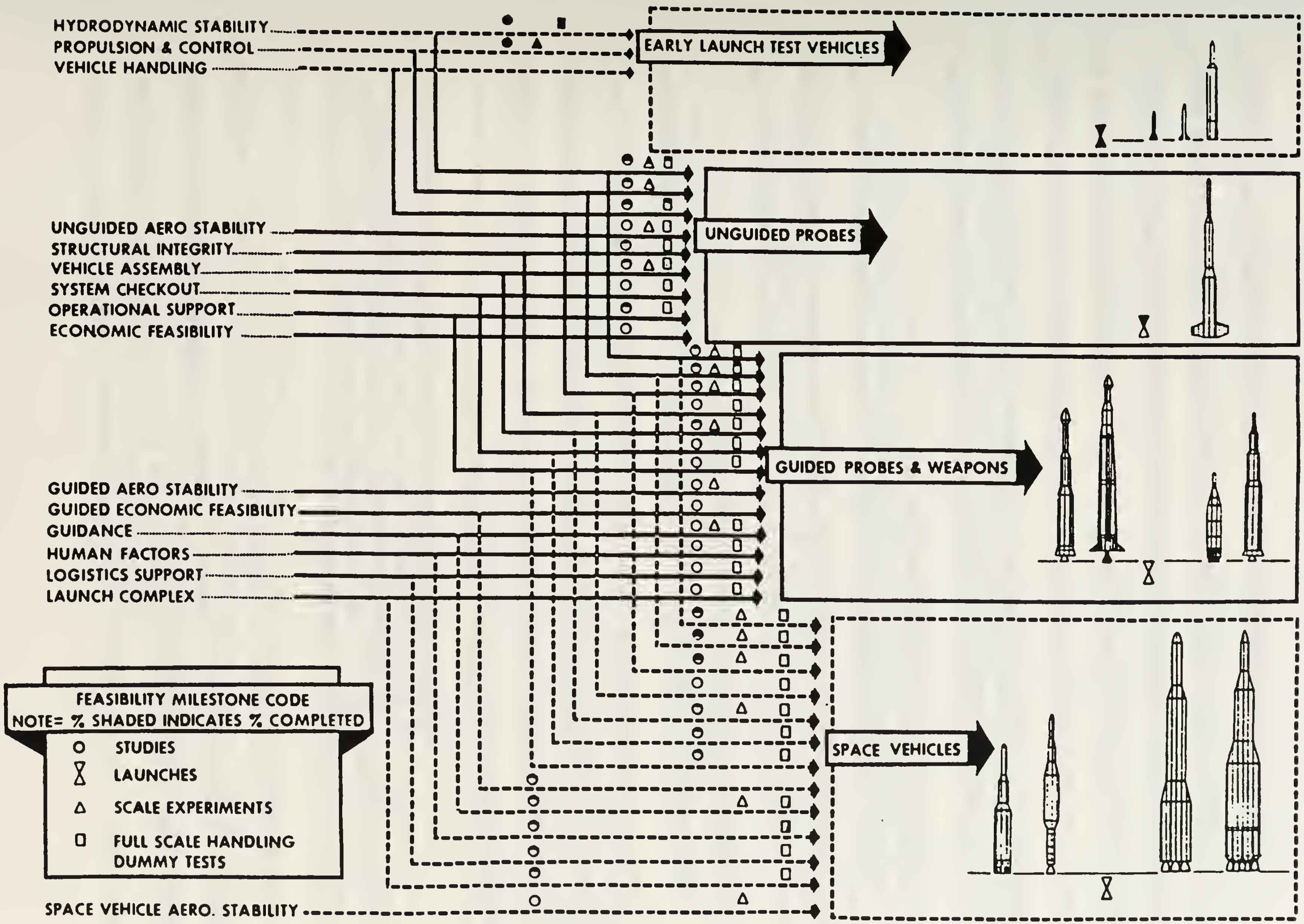
HYDRODYNAMIC STABILITY
PROPULSION & CONTROL
VEHICLE HANDLING
EARLY LAUNCH TEST VEHICLES
UNGUIDED AERO STABILITY
STRUCTURAL INTEGRITY
VEHICLE ASSEMBLY
SYSTEM CHECKOUT
OPERATIONAL SUPPORT
ECONOMIC FEASIBILITY
UNGUIDED PROBES
GUIDED AERO STABILITY
GUIDED ECONOMIC FEASIBILITY
GUIDANCE
HUMAN FACTORS
LOGISTICS SUPPORT
LAUNCH COMPLEX
GUIDED PROBES & WEAPONS
FEASIBILITY MILESTONE CODE
NOTE= % SHADED INDICATES % COMPLETED
○ STUDIES
X LAUNCHES
△ SCALE EXPERIMENTS
▯ FULL SCALE HANDLING DUMMY TESTS
SPACE VEHICLE AERO. STABILITY
SPACE VEHICLES

Figure 1

Within this figure is depicted a systematic approach to the development of a unique class of launch vehicles. Initially the prototype test vehicles, consisted largely of surplus and custom one of a kind rockets and missiles. The development of unguided suborbital probes followed, employing and refining the design features and elements derived from the previous test vehicles. They continued in complexity and development to the third class of suborbital guided probes and weapons. This process culminated into a class of orbital space vehicles, employing all of the features of the previous developmental stages and the same technology and construction principles.

Despite a very long string of successful launches and an ambitious program plan, the Navy canceled the Hydra program in 1965. While documentation explaining the decision is not available, one can only assume that with the Vietnam conflict looming on the horizon, the Navy had more important commitments elsewhere.

Also during this period, a retired Naval officer, Robert C. Truax, working as Director of Advanced Developments at the Aerojet-General Corporation, initiated an effort to discover the root causes of the high cost of space transportation and to formulate some principles for achieving more cost-effective designs. After collecting and examining all of the available data, his team reached the following conclusions:

> Costs vary only slowly with size, but very sharply with complexity, reliability, design margins, and "programmed invention." A large fraction of the cost of a space launch resided in the propulsion hardware that was thrown away. A low-cost launch vehicle, therefore, should be big, simple, reusable, not too reliable, and use existing state of the art technology wherever possible.[Ref 10]

The Aerojet team went on to design a vehicle, which in their estimation, would be capable of fulfilling all foreseen mission requirements. Using accumulated data supplied from Marshall Space Flight Center (MSFC) and NASA, they devised a cost-optimized design based upon the principles previously described, making trade-offs largely intuitively, and in general, tending away from existing configurations. This resulting design was dubbed "Sea Dragon."[Ref. 11] The economy of the "Sea Dragon" was obtained not through ever-increasing sophistication but through its great size, simplicity and reusability.[Ref 10] This prototype design embodied the characteristics deemed necessary for a low-cost launch vehicle:

- It was big, 500 feet tall and 75 feet in diameter, and had a liftoff weight of 40 million pounds; it was capable of lifting to low earth orbit (LEO) nearly 1.1 million pounds of payload per flight.
- It was simple; only two pressure-fed stages were used to attain LEO (300 nm). Each stage had only one main propulsion engine. Propellants used in the first stage were kerosene and liquid oxygen, in the second, liquid hydrogen and liquid oxygen.
- It was reusable; the simplest and lightest means available to return the stages to earth were used: a parachute-like drag device on the first stage, and a heat shield plus drag device on the second.
- It was sea launched; it was built in a drydock, towed to a lagoon, checked out dockside, fueled at sea, erected by flooding ballast, and launched directly out of the water.[Ref. 11]

The report was submitted to NASA for review and scrutinization. Eventually, being skeptical because of its significantly lower predicted cost per pound to low earth orbit, NASA let a contract to Space Technology Laboratory (now TRW) to reevaluate and presumably discredit the Aerojet team's costing analysis. Surprisingly however, the results of this costing review largely supported the original study's estimations.

Unfortunately, NASA funding began to decline after fiscal year 1964 and by the end of the decade was down from its peak of $ 5,350.8 million to $ 3,786 million in fiscal year 1970. This factor, combined with the public's apparent disinterest in repeated Moon landings by the early 70's and the increase in spending required to fight the war in Vietnam, led to the termination of funding for new vehicle concepts by NASA. As a result the "Sea Dragon" studies were never pursued and explored.

Looking back, one can only wonder what systems might be in place today had these two apparently promising concepts been allowed to be developed fully.

By the early 80's, numerous exercises, operational studies, and wargames had identified the requirements to proliferate and/or reconstitute space-based assets in times of crisis and in war. Most recently this need was demonstrated and validated in the Desert Shield and Desert Storm operations in the Middle East. This capability shortfall has led the Department of Defense to search for a low cost-per-pound to low earth orbit (LEO) space transportation system offering increased operational flexibility, redundancy, and responsiveness. Further, application of the concept could be realized within the commercial sector as a cost-competitive launch vehicle for industrial applications.

The motivation to pursue the sea launch and recovery concept is not new, as previously alluded to. Additionally, the requirements supporting the development of such a concept are not singular in nature. It is of fundamental importance to understand both the motivation and requirements for a sea launch and recovery type vehicle. Only then, can one fully appreciate the importance and significance of developing SEALAR as a viable alternative and supplement to the assets presently available for placing both men and equipment into space.

In 1986, DOD 5100.1 "Function of the Department of Defense and Its Major Components" described two functions of the Department of the Navy (DON):

1) Develop in coordination with the other services, procedures and equipment employed by the Navy and Marine Corps forces in the conduct of space operations

2) Provide sea-based launch and space support for the Department of Defense when directed

The Secretary of the Navy opened discussion within the Navy in 1987 asking such questions as: "Will the technology work?" "Is the SEALAR concept advantageous to the Navy?" "How promising is the development of a sea-based launch platform?"

Consequently, the SEALAR program was initiated after gaining support from the Chief of Naval Research, Commander Naval Space Command, and Director of the Naval Center for Space Technology (NCST). NCST of the Naval Research Laboratory (NRL) has become the primary source for personnel and resources for the project.

On the private sector side of the equation, Truax Engineering Inc. (TEI) submitted a proposal in response to the original NCST Broad Area Announcement which appeared in Commerce Business Daily on 25 August 1988. The proposal submitted included both analytical and experimental work which had been completed to date exclusively with private funds in support of the company's goal of ultimately demonstrating the principles set forth in the original "Sea Dragon" proposal some 35 years ago.

> The Navy purchased the Truax Engineering prototype rocket, called the X-3, along with all associated ground support equipment for the fixed price of $750,000. Along with the rocket the Navy gained any patent rights or other intangibles associated with it and owned by Truax Engineering Inc., including the right to have the equipment or any portion of it reproduced by others without further compensation.[Ref. 12]

The present SEALAR project is envisioned as the integration of the various design concepts which will ultimately lead to the development of a new family of simple, mobile and reusable space launch vehicles. These SEALAR launch vehicles portend to provide low cost and reliable access to space through the use of the following fundamental design concepts:

- Low cost liquid propellants (LOX, Kerosene, LH2)
  Provides: Low cost, ease of handling

- Two stages to Low Earth Orbit (LEO) design
  Provides: Simplicity, reliability and low cost

- Single engine per stage
  Provides: Simplicity, reliability and low cost

- Pressure fed engine design
  Provides: Simplicity, reliability and low cost

- Low chamber pressure engines
  Provides: Simplicity, reliability and low cost

- Hydrogen dump cooling of large, low pressure thrust chambers
  Provides: Low weight penalty allowing larger payloads

- Low cost high strength tanks, constructed employing conventional technology
  Provides: Simplicity, reliability, performance, and low cost

- Global Positioning System (GPS) navigation
  Provides: Simplified logistics, reliability and low cost [Ref 13]

Recently, Truax Engineering Inc., under the direction of the Naval Center for Space Technology and in conjunction with the Naval Research Laboratory have set up a comprehensive test plan. Initially, employing the X-3 rocket as the primary test vehicle, the test plan objectives include the verification of the design features of a water-launched vehicle, and multiple use and refurbishment characteristics. Also, through repeated launches and recoveries, experience can be provided from which more accurate estimates of turnaround costs may be made.

Lastly, and perhaps most importantly, the following two tables (Tables 1 and 2) vividly illustrate the advantages and benefits of the SEALAR concept over that of conventional expendable launch vehicles.

COMPARISON OF SEALAR AND EXPENDABLE LAUNCH VEHICLE (ELV) CONCEPTS

FACTORS UNIQUE TO SEA LAUNCH

TABLE 1

Parameter	SEALAR Concept	Conventional ELVs
Launch Inclination	Water Launch allows feasibility to match launch latitude to orbit inclination for optimization of payload performance	Fixed US launch site locations, at roughly 40N latitude, result in payload performance reduction for low-inclination orbits
Launch Rate	The Water Launch Concept allows for an unconstrained launch rate	Launch rate limited by pad availability (typically 4 launches/year/pad) - could preclude high launch rate programs
Launch Azimuth	Unconstrained with Water Launch affording maximum mission performance	Limited by ground overflight restrictions - required dog leg maneuvers reduce achievable performance and add complexity
Launch Pad Refurbishment	Water Launch results in minimal damage to launch support infrastructure, thereby reducing cost	Extensive pad refurbishment required after each launch

COMPARISON OF SEALAR AND EXPENDABLE LAUNCH VEHICLE (ELV) CONCEPTS

FACTORS NOT UNIQUE TO SEA LAUNCH

TABLE 2

Parameter	SEALAR Concept	Conventional ELVs
Launch Reliability	Ultra Conservative Design provides high confidence launch; may sacrifice some performance for reliability	Emphasis on high performance with inherently complex, pump-fed engines
Launch Vehicle Cost	Conservative approach of simplicity over optimized performance minimizes cost	Stress on high performance over simplicity results in high cost
Launch Vehicle Stage Reuse	Attractive cost savings possible through recoverable and reusable staging concept	Expendable Launch Vehicle concepts, by definition preclude reuse, a potential cost savings
Launch Support Infrastructure	Building-block launch vehicle approach provides for common mission support facility	Unique launch pads for each ELV type results in inefficient pad utilization and non standard logistic requirements

It appears that the development of the SEALAR technology will provide the U.S. Navy, as well as other government and commercial interests, a low-cost-per-pound space transportation system with increased responsiveness, survivability, capacity, flexibility, and operation availability. With such a space transportation system a reality, it will become possible to satisfy all of the present major space missions in an economic fashion, including Space Defense Initiative (SDI), the manned space station (Freedom), a manned Lunar base, and the Manned Mission to Mars.

III. THE PROGRAMMING ENVIRONMENT: HYPERCARD™

In this section the primary programming development tool, HyperCard/HyperTalk™, will be briefly described. The programming environment HyperCard was developed by Apple Computer® Incorporated. It is designed to run exclusively on the Macintosh™ family of computer hardware. It is now being marketed as an extension of the Macintosh operating system. The HyperCard, Version 2.0 edition, was used for the development of the program on which this thesis was based.

HyperCard is an event-driven, object-oriented programming environment that is driven by messages to and from objects. Actions are initiated in response to events which then send a chain reaction of messages from one object to another. HyperCard, also contains a general purpose programming language called HyperTalk. This programming language provides tools for painting, editing functions and semiautomatic program development. HyperCard is truly a multi-media development system that affords the programmer the ability to rapidly and easily integrate graphics, text and audio into an object-oriented environment.

The programmer interface with HyperCard is very intuitive and easily learned; this is true as well for the user. An individual with little or no programming background is able to create very professional looking programs without writing any code. At the other end of the spectrum, a experienced programmer is capable of creating powerful functions and commands written in other computer languages, which may not be presently available in the HyperTalk functions. HyperCard has proven to be a substantial labor saving developmental environment and has significantly extended the domain of software development.

HyperCard uses the metaphor of a stack as an object that can hold both processes and data, and exists only in the context of a stack. It is important to point out that a HyperCard stack is uniquely different from the classical data structure, in that it can be accessed from top or bottom or anywhere in between. HyperCard supports development of stacks that allow data, which may be any combination of text, graphics and sound, to be stored, linked, searched and or viewed. This unique set of attributes provides for the basis of the multi-media database application. Information may readily be linked relationally within a stack or from one stack to another. HyperCard is clearly not a replacement for traditional databases. However, as a stand alone multi-media database development tool, HyperCard allows applications to be constructed in minutes that would require monumental effort in conventional programming language.

Within the HyperCard programming environment there exist five pre-defined objects. They are buttons, fields, backgrounds, cards and stacks. All HyperCard objects are able to send and receive messages; have unique properties including script which is code associated with that particular object; and have a visible representation that may be turned on or off. A button is a specified area on a card that is accessible with the mouse pointer. Buttons may be graphical, textual, a combination of both or totally invisible. When the user clicks the mouse pointer on a button, a message will be sent to the button and the script of the button will be executed. A field is an area in which textual data is stored on a given card. Fields are not static. They may be adjusted to any desired size, shape or appearance. Field scripts, like all scripts in HyperCard, are also event driven. Backgrounds are objects that cards often times share to give the program a homogeneous look. Cards are the objects on which fields, buttons and backgrounds reside. A stack can consist of only a few cards or several million depending upon the application. The stack, along with the objects it contains, cards, backgrounds, buttons and fields, and any attached outside resources, constitute the executable program.

Modularity is a unique property of objects in HyperCard. Once created an object may be moved in its entirety to another stack with its graphical appearance, scripts and resources intact. This feature makes HyperCard particularly suitable for rapid prototype development and facilitates code reusability.

Sending messages is an important characteristic of an object-oriented programming environment. HyperCard generates messages, called system messages, which are sent to objects in response to certain program events. This affords the programmer the ability to model real world data efficiently and accurately. It also permits the establishment of browse, search and reporting capabilities within a program.

Whenever script is executed a message is generated. The first object to receive the message is the sending object and if it has a message handler (a subroutine in HyperTalk) it will execute the handler. The script can also call the same message handler from which the message originated. This is called recursion in HyperTalk. HyperTalk is also capable of nesting, which would occur if handler 1 in object A calls handler 2 also residing in object A. These capabilities allow the developer to create data structures similar to those found in conventional programming languages.

Within HyperCard are found two types of objects: transparent and opaque. Transparent objects are virtually invisible, that is they allow the user to look down through layers of cards below the top layer. Opaque objects however are solid. Consequently, they block the user from observing objects directly below. Every HyperCard object is created in its own layer; the layers are placed one on top of the other as the objects get added to the stack. The layers perhaps can be best visualized as infinitely thin sheets of clear plastic. Opaque objects are visible through all layers of the stack regardless of their relative stack position, that is unless they get covered by another opaque object in a subsequent layer which would render the lower object impossible to be seen by anyone looking down. Transparent objects allow the user to observe opaque objects below.

Buttons, which are a type of HyperCard object, can be layered into a stack like any other object. Whether transparent or opaque, buttons will react to pointer mouse clicks regardless of depth in the layer. This is different from transparency, in that, when an object's visibility is set to false the object not only cannot be seen but is also deactivated. However, attributes of an object whose visibility is set to false may be obtained or changed through the use of the scripting language HyperTalk. Visibility and layering together provide the programmer with the ability to construct complex data structures and establish inheritance of code by layering buttons on top of one another and passing discrete commands from one layer to another. This is a very significant attribute in that it greatly facilitates compactness and reusability of code. Specifically, the invisible button was essential for the development of the SEALAR program because it is by employing this feature that the user is able to define a pathway to a desired subsystem, component and piece or part. All that is required for the user is to click on a graphic representation and the program will respond by displaying a blowup of the selected graphic.

The two categories of layers found in HyperCard are background and card. Everything assigned to a background is active and visible on every card of that same background in the stack, that is anything placed into a background design gets copied onto every other card with the same background: this includes graphics, text, and buttons. The programmer can choose to place graphics, text, or buttons onto a specific card and have them visible only when that particular card is the top card in the stack, by placing those objects into the card domain. All objects in the card domain are in the very top layers of the stack with background objects lying below. The card domain can be thought of as a foreground. Conceptually, it is very important to note that card objects are visible and active only in their respective layers, whereas background objects are visible and active for all cards sharing a particular background. In terms of creating applications, this subtle difference between foreground cards and backgrounds becomes an indispensable tool for the programmer to hide certain action buttons from the user at different points of the program by covering up an action button on a background card with an opaque object on a foreground card. Background buttons can be created only one at a time, each in its own layer; however, the user can not discern any difference between the two buttons or the two layers because both opaque buttons are readily visible and show no obvious indications of being in two completely different layers. Careful manipulation of the background and card layers enables the programmer to develop a look and feel which results in a user friendly interface. This also allows for the modeling of complex data structures that are analogous to everyday metaphors.

System protection for SEALAR is inherently important for the establishment of program and data integrity. This is easily supported by HyperCard in the form of its built in stack protection mechanism. Stack protection is provided by the system. The level of protection is determined by the programmer and is assigned via the "protect stack" menu which allows for the selection of virtually any level of protection desired. Passwords are available options that can be used to protect a particular stack. A more sophisticated level of protection exists by using the scripting language HyperTalk which allows the programmer to limit the data which may be accessed down to the data element level. This capability may be extended to password protection which can be applied to protect a specific data element or specific function. By employing the scripting language HyperTalk a programmer has complete flexibility with regard to limiting users to specific functions and data elements.

Another extremely important aspect of HyperCard is its linking ability. HyperCard links are a method of establishing a unidirectional pathway from one card to another. Links may be between cards in the same or different stacks regardless of either card's relative stack position. Bi-directional links can also be programmed by inserting a unidirectional button on each card such that each card has a pathway to the other. To establish links between cards in the same stack either the unique card identification number is used as a destination address or the card name can be used. Links to cards in different stacks are exactly the same with the addition of the new stack name to the destination address. HyperCard linking enables the programmer to implement true conceptual relational database applications, that is, data never needs to be duplicated and there is no data redundancy. This is accomplished by HyperCard's ability to create links via unique identification numbers that are independent of data content.

HyperTalk is a general purpose programming language that contains an extensive set of commands and functions. It is also a special purpose language that tends to be better for some programming tasks than most other languages, such as construction of visual databases and educational systems. It is a very intuitive and natural language which tends to favor nonprogrammers in its grammatical style. The object-oriented nature of HyperTalk makes the scripting portion of the programs compact, extremely easy to debug and very portable from one to the other. The finished programs tend to be very intuitive for the user to operate and have a visual look and feel that in other languages would be hard to achieve. This makes HyperTalk a very labor saving programming language. One of the most powerful features of HyperTalk are the external commands (XCMD's) and external functions (XFNC's) which allow virtual unlimited extendibility. When HyperTalk was created two interface capabilities were installed called XCMD and XFNC. These two items enable HyperTalk to search the resource fork of the stack for a command or function if it is not found with the stack script. This capability provides virtual unlimited extendibility to the HyperTalk language. HyperTalk will search the resource fork of the stack for an unknown command of the type XCMD and likewise will search for an unknown function of type XFNC for an unknown function. Therefore, when a programmer wishes to extend the language for HyperTalk, he can write a function or command in another language and move it into the resource of the stack where he wishes to use it. Consequently, extensions to the HyperTalk language are always carried with the individual stacks that require them. Selected commands and functions from a library of XCMD's and XFNC's are easily moved into and out of stacks as desired.

The HyperTalk scripting language is totally unique among programming languages. Command structures are English like sentences or phrases such as "go to card 8613" or "set the user level to 5." HyperTalk is also very forgiving in syntax and it allows multiple variations in command structure. This is a very important distinction in terms of ease of programming, project implementation and project modification.

Functions in HyperCard may be one of three types: HyperTalk defined, user defined, or XFNC. HyperTalk functions behave in the same fashion as conventional programming language functions. When a function is invoked in HyperTalk, the scripts are searched in a hierarchical fashion until a match is found. If it doesn't find a match then the resource fork is checked to determine if a XFNC is available. This method of determining function location allows the programmer to redefine system functions as well as define entirely new ones. The ability to redefine the environment proved very valuable as this program was built. While HyperTalk is powerful enough to handle most programing requirements, the ability to write XCMD and XFNC in other languages is extremely useful. This capability allows discrete external functions and procedures to be executed from within a HyperCard stack.

There are two sound commands available in HyperTalk, play and beep. Play requires a digitized type resource to be available in the stack for the voice parameter. The play command is used to play digitized sound or to play music form a string of notes. Beep is used to invoke the system beep. Another common sound command which is an XCMD is called "Talk." Talk, uses another program called MacinTalk™, which is a product of Apple Computer Incorporated. It converts text or phonemes into computer generated speech. Both digitized speech and "Talk" were utilized throughout the SEALAR program in an effort to appeal to the user's audio sense and to promote a friendly "look and feel."

The most significant criticism of HyperCard is that its language HyperTalk is an interpretive language. In some applications this tends to degrade execution speed. This is offset, however, by HyperCard's rapid search and card selection rate. Another limitation is that, at present, HyperCard can only display one card on a black and white screen at a time. Some of these limitations have been remedied by the creation of handlers by individual programmers in the form of XFNC's and XCMD's and are available in the public domain. Presumably, future upgrades will be made available that will move HyperCard into the realm of color graphics and multi dimensional displays. These features will serve to make the challenges and options available to the programmer even more fascinating and interesting.

IV. APPLICATION AND IMPLEMENTATION

As designed and implemented the SEALAR prototype is based upon a single graphical stack which allows the user to readily visualize images of the rocket system, subsystem, or component. The HyperCard program provides the user with a visible graphic interface, supplemented with audio descriptions, and coupled with a technical textual description thereby reducing the technical knowledge required to become proficient in using the program.

The stack is constructed using modular design features. This aspect is of critical importance because it enables the software program to be dynamic and respond to frequent or periodic updates and revisions. By maintaining this modularity, changes can be implemented within one module with no adverse side effects to other modules within the program.

The SEALAR prototype is entered at the subsystem level. The user is then asked to select one of seven modeled subsystems available for examination. This approach is in no way intended to be all inclusive or static, rather it is intended to represent a reasonable subsystem break down of the X-3 rocket modeled. Appendix A depicts the stack developed for the SEALAR prototype program. Conceptually, there would be seven virtual stacks, with one representing each subsystem. Within each subsystem's virtual stack there would reside the actual individual component stacks. Quite literally, each component installed on the modeled rocket would have its own stack consisting of the myriad of subcomponents that make up the functional unit. This serves to demonstrate the modularity feature referred to earlier. As design changes and modifications are contemplated or implemented, only the corresponding stacks need be updated, not the entire program.

The SEALAR prototype represents a multi-media database. Graphics are employed to represent objects that were historically represented by textual descriptors or attributes. In this program the textual information is used to enhance and expand the meaning of the object the user is currently viewing. Audio is additionally employed to enhance the intuitive environment. When viewed on the whole, the program provides a true multi-media presentation.

The background buttons which appear on every card of the stack are an integral part of the look and feel of the SEALAR prototype. Examples of these background buttons include HELP, LIBRARY, SEARCH, etc. The HELP button allows the user to quickly refer to a system reference manual if disoriented while navigating through any portion of the system. The TECHMAN button gives the user instant access to the pertinent section of the "X-3 Technical Manual"[Ref. 13], that applies to the particular subsystem or component currently being viewed. A copy of this technical manual is included as Appendix C. The "Previous Card" button located in the upper right hand corner of every card enables the user to return to the previous card viewed and in this manner literally to back out of the graphical path just navigated. The rocket button located in the upper left hand corner of every card provides the user with the ability to immediately return to the beginning of the graphical hierarchy of the subsystem stack so that multiple subsystems or components can be investigated without having to exit and reenter the program.

All graphic buttons are invisible so that they can be positioned over the various graphics found on each card. Special buttons are also utilized throughout this program. For example, the COST button instructs the HyperCard program to open a spreadsheet application in another program. In the case of the SEALAR prototype, the spreadsheet program employed was Microsoft® Excel, version 3.0. This program exhibited the capabilities to perform and display the required continuous costing computations and the tracking of the changing interface relationships in an efficient and flexible manner. These features are demonstrated in the cost analysis of the propulsion subsystem included as Appendix D. It is in this manner that the component and subsystem costs and interface relationships can be tracked, evaluated and maintained.

The HELP stack is an integral part of the entire program. It has been developed to provide the user with an intuitive look and feel that will answer any program specific questions that may arise at any level within the SEALAR prototype program. Help has a search function that eliminates the need to page through the entire stack to answer a single question and it fully defines the functionality of all background buttons. In addition to the functionalities described above, several scripts were employed to automate the development process. This capability significantly enhanced the development process and helped make the SEALAR prototype a reality.

The graphics in the stack were scanned into a Macintosh II® computer using a Hewlett Packard Scan Jet® scanner from reduced sized blue prints. The scanning program used was called Deskscan® version 1.0, developed by Zedcor Inc. The graphics were then imported and enhanced in a program called Deskpaint® version 1.05, also by Zedcor. They then were copied and pasted into Superpaint, a graphics program developed by Silicon Beach Software Inc. From this Superpaint file each graphic was brought into the HyperCard program and placed onto an individual card. These cards then comprise the SEALAR prototype stack.

The SEALAR program can be run on any Macintosh Plus with 4 megabytes RAM internal and a 20 megabyte harddrive. The installed programs required on the computer include Macintalk, HyperCard version 2.0 and Microsoft Excel version 2.1. The final file sizes for the program were as follows: the HyperCard file was 433K, and the Microsoft Excel file was 17K.

V. ANALYSIS AND CONCLUSIONS

This study indicates that it is indeed possible to develop a reliable and accurate system for the tracking of costs and interface relationships through the employment of off the shelf multimedia technology. This approach offers several advantages over those conventionally employed. Development time using this type of technology is dramatically reduced due primarily to its object-oriented nature, overall system environment, and extensive set of development tools available. The testing of the working prototype can be carried out throughout the development process to verify accuracy and program operation. Software and hardware acquisition and maintenance are both relatively inexpensive and easily attainable because of the use of off-the-shelf equipment and programs available commercially. The level of friendliness of the program greatly facilitates the acceptance by initial users, and the lack of a formal or complex query language significantly reduces training time. Lastly, because of the modular construction of the program, changes and revisions to individual elements are easily made and do not affect other modules within the program.

Having the basic computer program completed, it will now be relatively simple for the continuation of development into the next rocket to be constructed. The most critical aspect of this development will be the acquisition of accurate and detailed costing and parts data from the contractors involved. Additionally, the development of a method to accurately track manhours for construction, design and development and those costs associated with these areas will be required. The tracking and optimization of cost and interface interactions will be critical to the SEALAR program's success. In conclusion, it has become evident that this can be accomplished both accurately and economically through the employment of multi-media technology. This approach will contribute significantly to SEALAR's viability among the launch vehicles both in the inventory today as well as those on the drawing boards for tomorrow.

As of the date of completion of this document, the SEALAR program remains in the proof of concept phase. Initial plans for a July 1991 launch of the proof of concept vehicle, the X-3 had to be scrubbed after an oxygen leak developed in the pressurized oxygen tank during a static test. Subsequently it was determined that all of the X-3's tanks needed to be replaced. Plans now include the building of the X-3D, the follow-on rocket, and in its consturuction employ stainless steel tanks vice the maraging steel of those used in the X-3.

REFERENCES

1. Navy Space Systems Activity, Los Angeles CA, Report No. NSSA-R-20-72-2 U.S. *Space Launch Systems (U)*, Hap Hazard, 1 March 1973.

2. U.S. Congress, Office of Technology Assessment, Reducing Launch Operations Costs: New Technologies and Practices, op.cit. The Shuttle program consumes approximately one-third of NASA's yearly budget. See U.S. Congressional Budget Office, "The NASA Program in the 1990s and Beyond" (Washington, DC: Congressional Budget Office, May 1988), p. 20.

3. International Security & Commerce Program, Office of Technology Assessment, Congress of the United States, *Big Dumb Boosters, A Low-Cost Space Transportation Option ?,* An OTA Background Paper, Washington, DC 20510-8025, February 1989.

4. Draim, John E., Captain, USN Ret.,"The Hydra Launch," *Proceedings,* pg 112, February 1983.

5. Baker, David, Ph.D., *The Rocket, The History and Development of Rocket and Missile Technology,* pg. 154, Crown Publishers, Inc., New York, 1978.

6. "Sea Dragon in the Manned Mars Mission," R.C. Truax, Truax Engineering Inc., 12401 Green Meadow Lane, Saratoga, CA, 1987.

7. Draim, John E., Lieutenant Commander USN, "Application of the Hydra-Type Sea Launch to Vertical Probes", *Navigation,* Vol 9, No. 1, 1962.

8. Draim, John E., Captain, USN Ret., "Move MX Missiles Out to Sea", *National Review,* pg. 1500, December 12, 1980.

9. "Hydra Program Plan," U.S. Naval Missile Center Point Mugu, CA, 1962.

10. "Sea Dragon in the Manned Mars Mission," R.C. Truax, Truax Engineering Inc., 12401 Green Meadow Lane, Saratoga, CA, 1987, pg 2.

11. Aerojet-General Corporation, Report No. LRP 297, vol 2, *Sea Dragon Study,* Sacramento, CA., NASA contract NAS8-2599, February 1963.

12. "Proposal for SEALAR Program," Program Definition Phase, Truax Engineering Inc., 12401 Green Meadow Lane, Saratoga, CA, 1987, pg 28.

13. Slater, Dan, *X3 Vehicle Handbook for the SEALAR Rocket Project, Revision 1.1,* pg 1-1, Truax Engineering Inc. 5925 Farnsworth Court, Carlsbad, CA, 92008, 12 April 1991.

14. Prof. Donald A. Lacer, Naval Postgraduate School, Monterey, CA, Subject: SEALAR vs Expendable Launch Vehicle Comparisons, Memo dated August 11, 1991.

APPENDIX A

SEALAR STACK

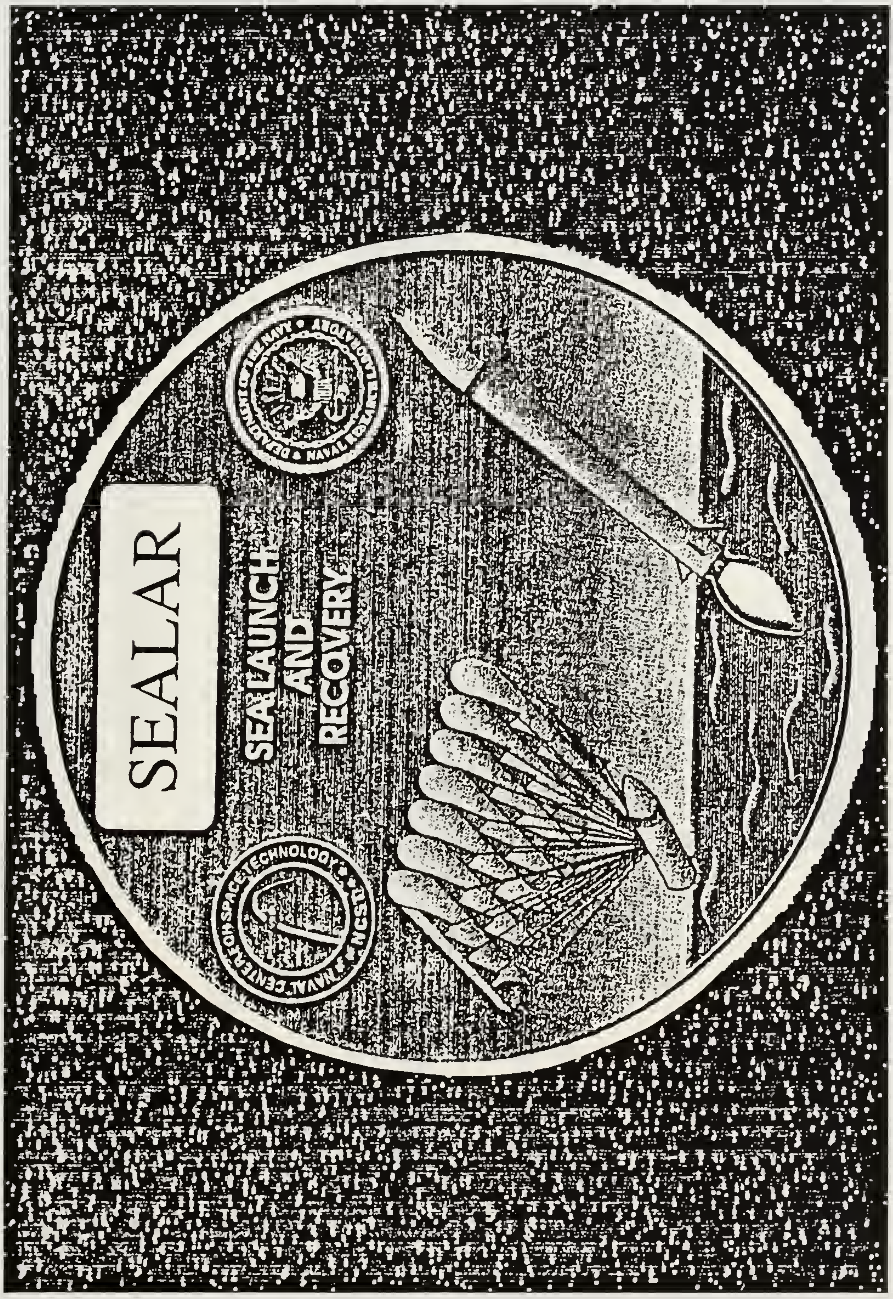
SEALAR
SEA LAUNCH AND RECOVERY
DEPARTMENT OF THE NAVY • NAVAL RESEARCH LABORATORY
NAVAL CENTER FOR SPACE TECHNOLOGY • NCST

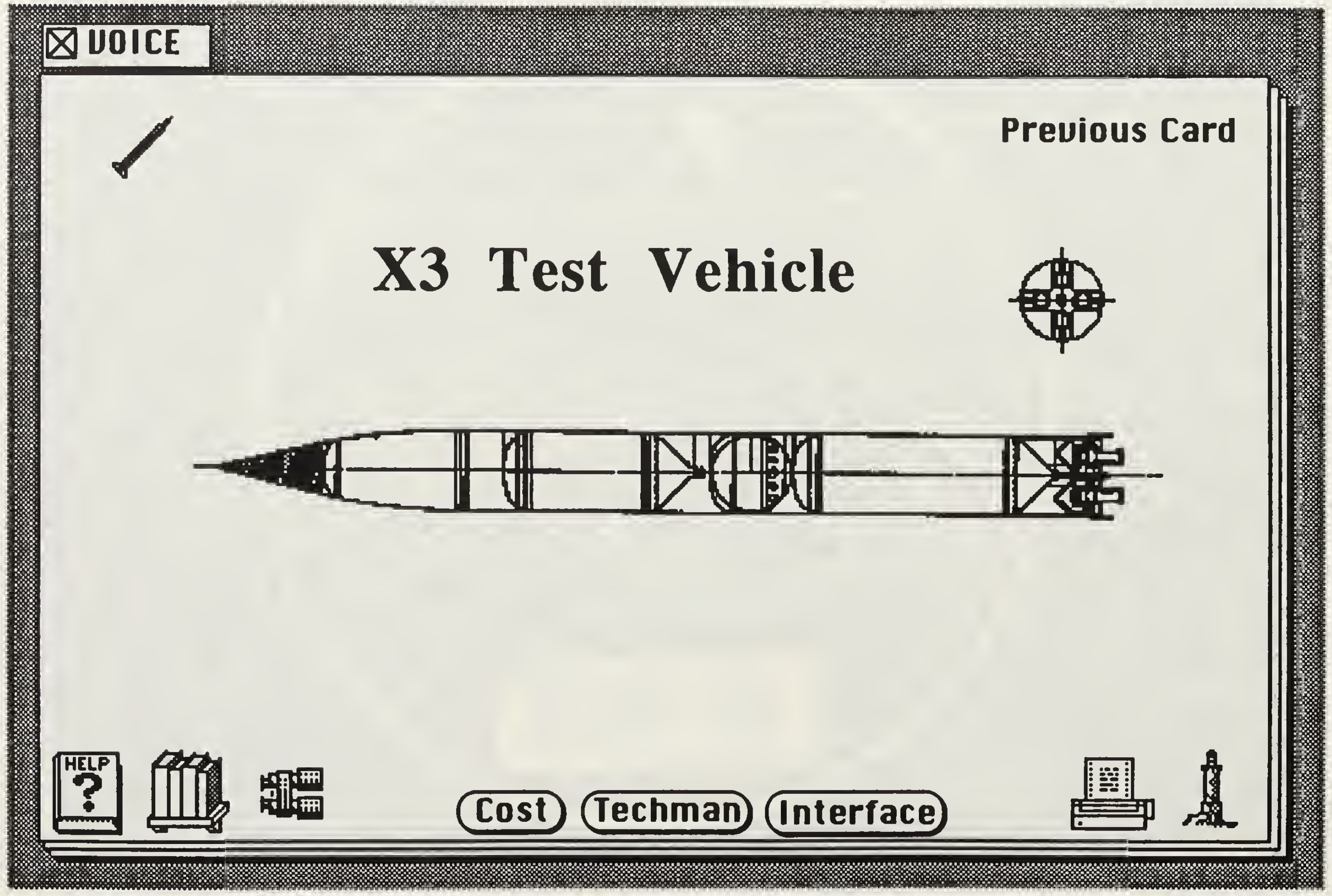
☒ VOICE
Previous Card
X3 Test Vehicle
HELP
?
Cost
Techman
Interface

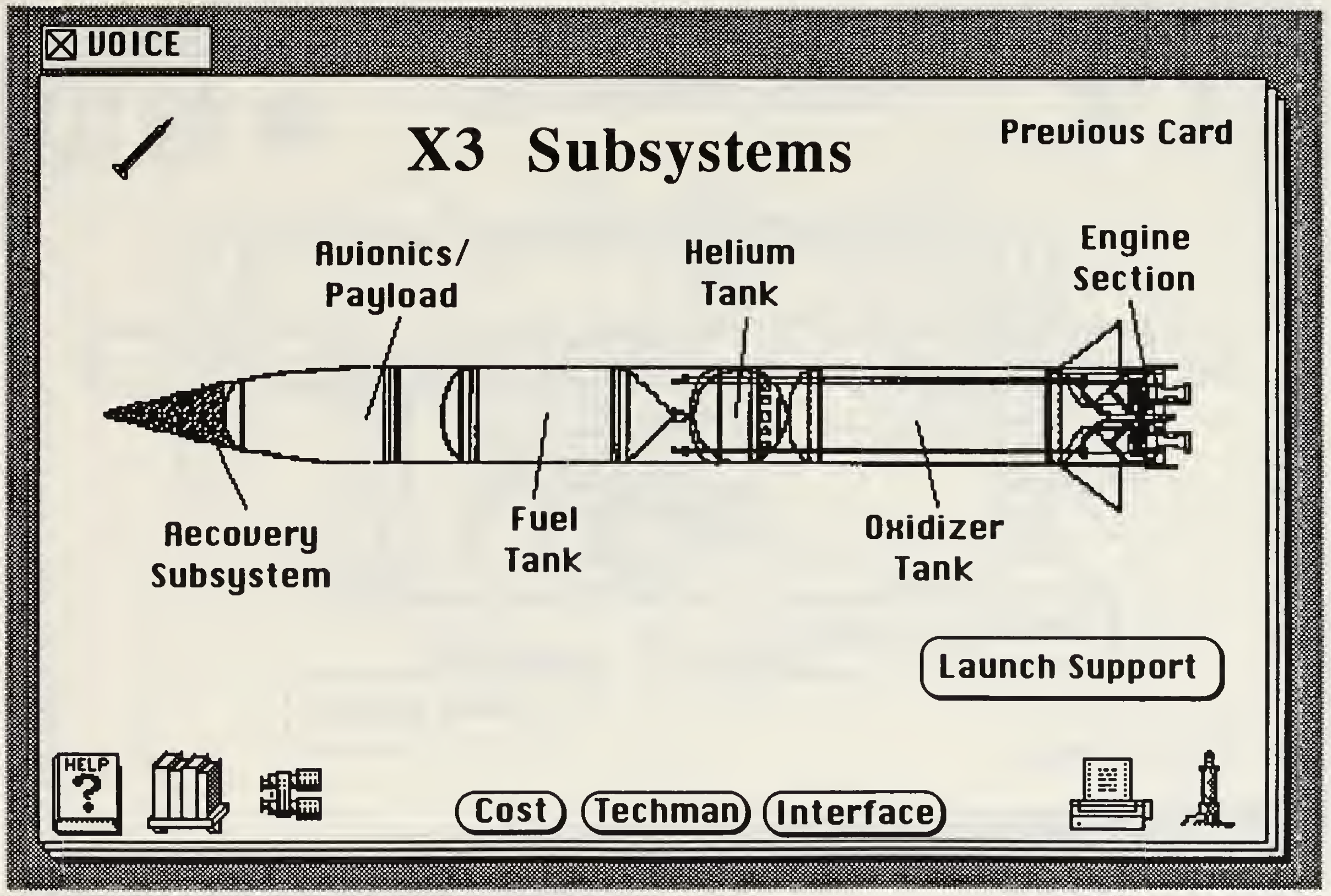
☒ VOICE
X3 Subsystems
Previous Card
Avionics/ Payload
Helium Tank
Engine Section
Recovery Subsystem
Fuel Tank
Oxidizer Tank
Launch Support
HELP ?
Cost
Techman
Interface

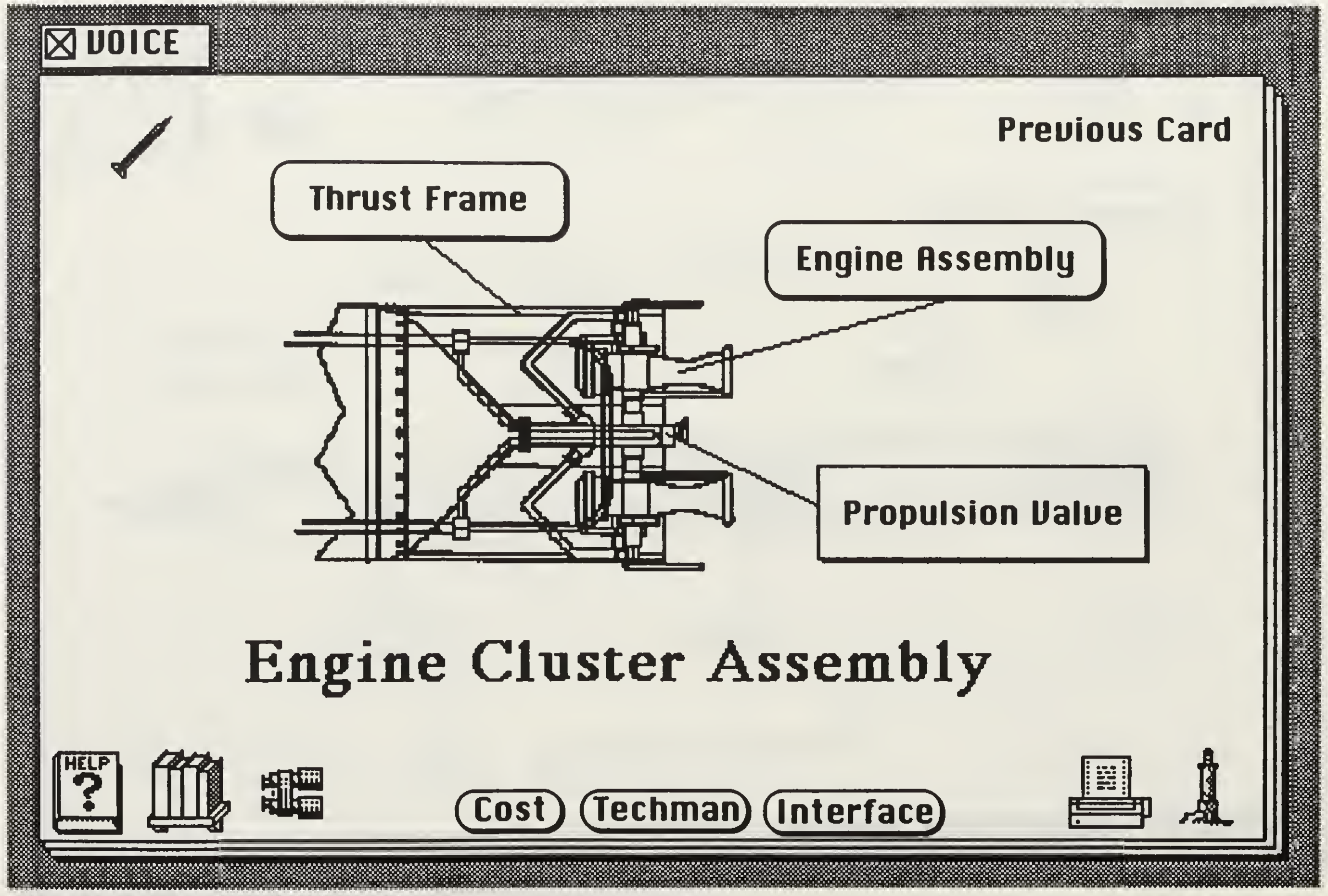
☒ VOICE
Previous Card
Thrust Frame
Engine Assembly
Propulsion Valve
Engine Cluster Assembly
HELP ?
Cost
Techman
Interface

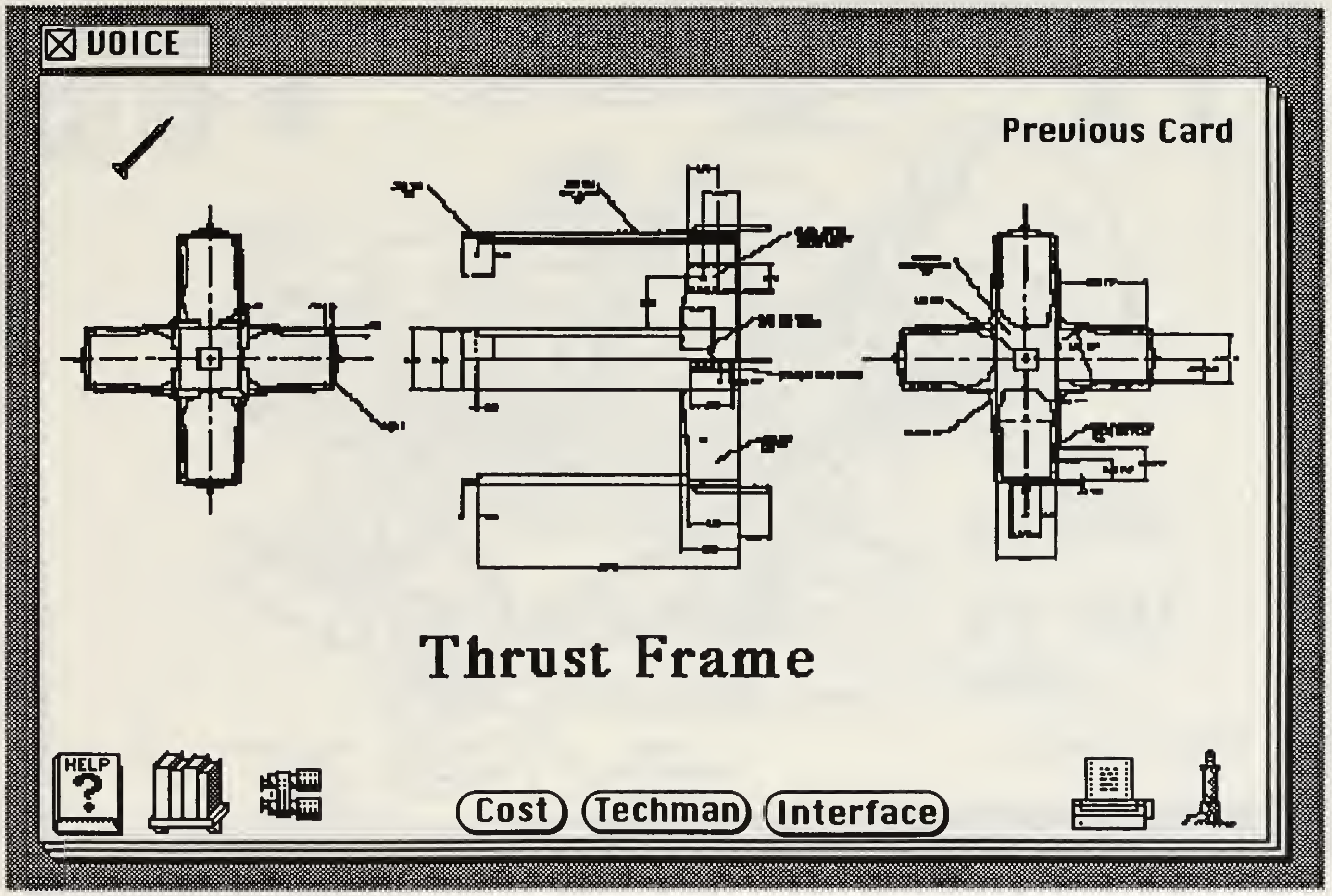
☒ VOICE
Previous Card
HELP
Cost
Techman
Interface

Thrust Frame

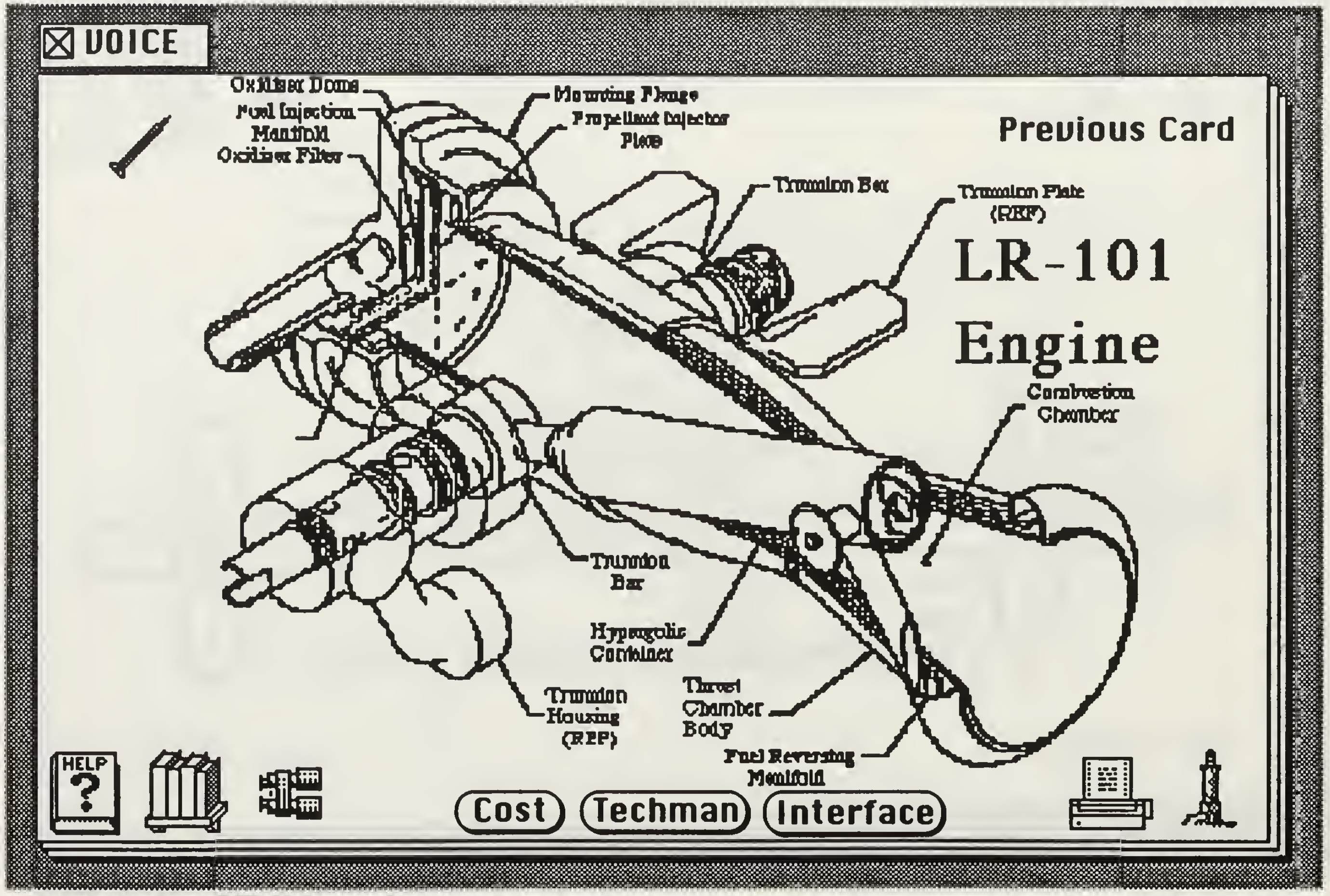
☒ VOICE
Previous Card
LR-101
Engine
Oxidizer Dome
Fuel Injection Manifold
Oxidizer Filter
Mounting Flange
Propellant Injector Plate
Trunnion Bar
Trunnion Plate (REF)
Combustion Chamber
Trunnion Bar
Hypergolic Container
Trunnion Housing (REF)
Thrust Chamber Body
Fuel Reversing Manifold
HELP ?
Cost
Techman
Interface

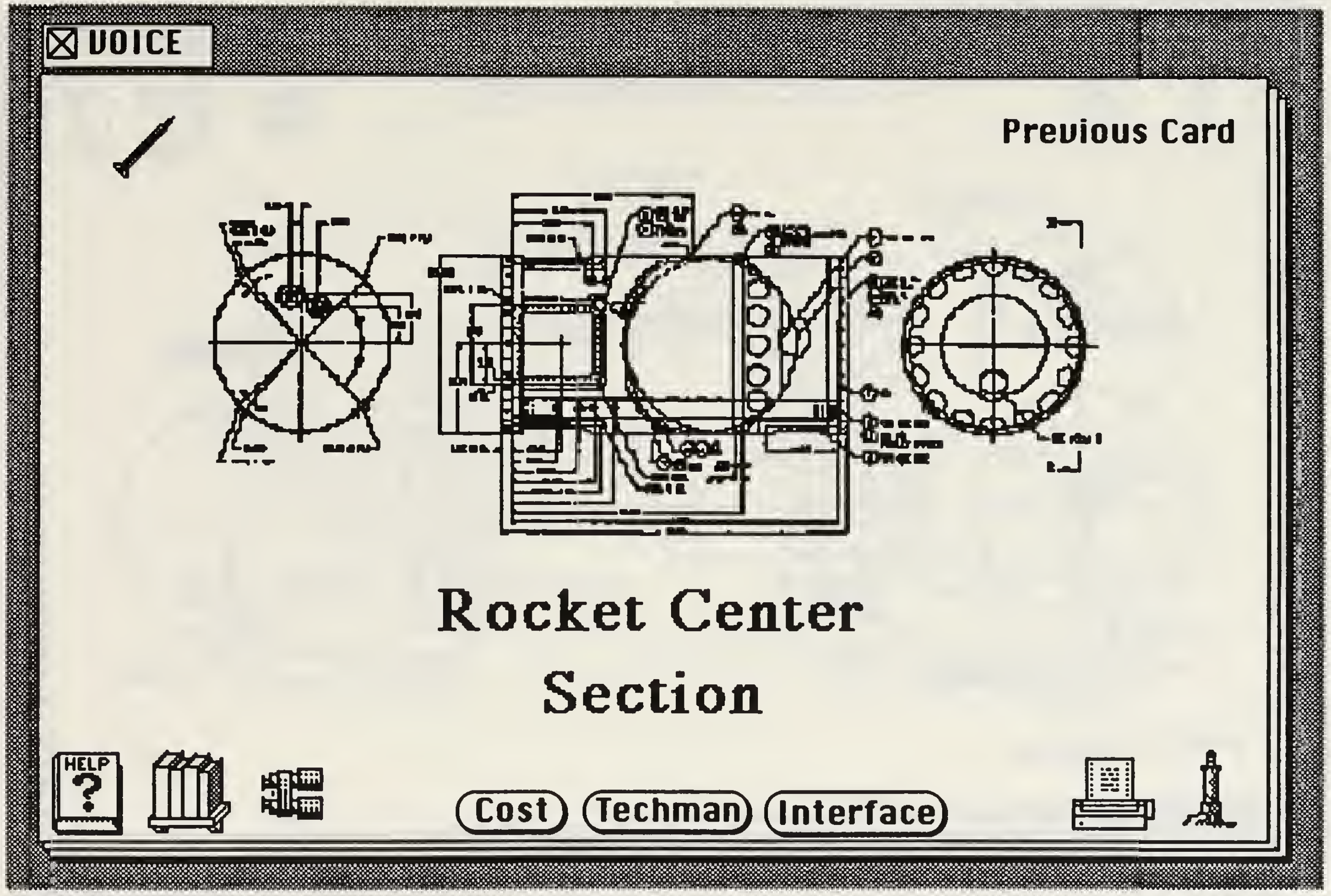

☒ VOICE
Previous Card
Cost
Techman
Interface
HELP

Rocket Center

Section

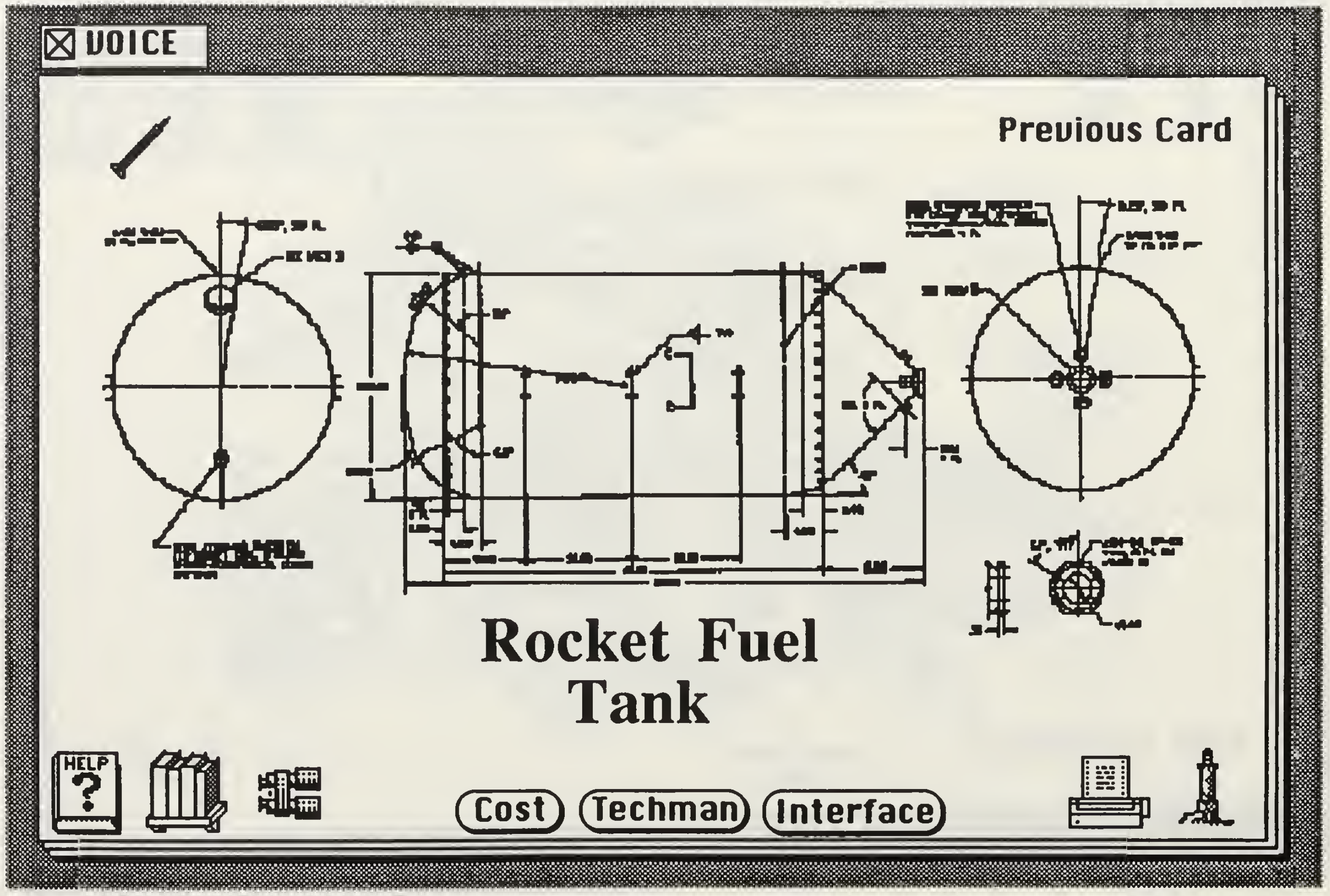
☒ VOICE
Previous Card
Rocket Fuel Tank
HELP
Cost
Techman
Interface

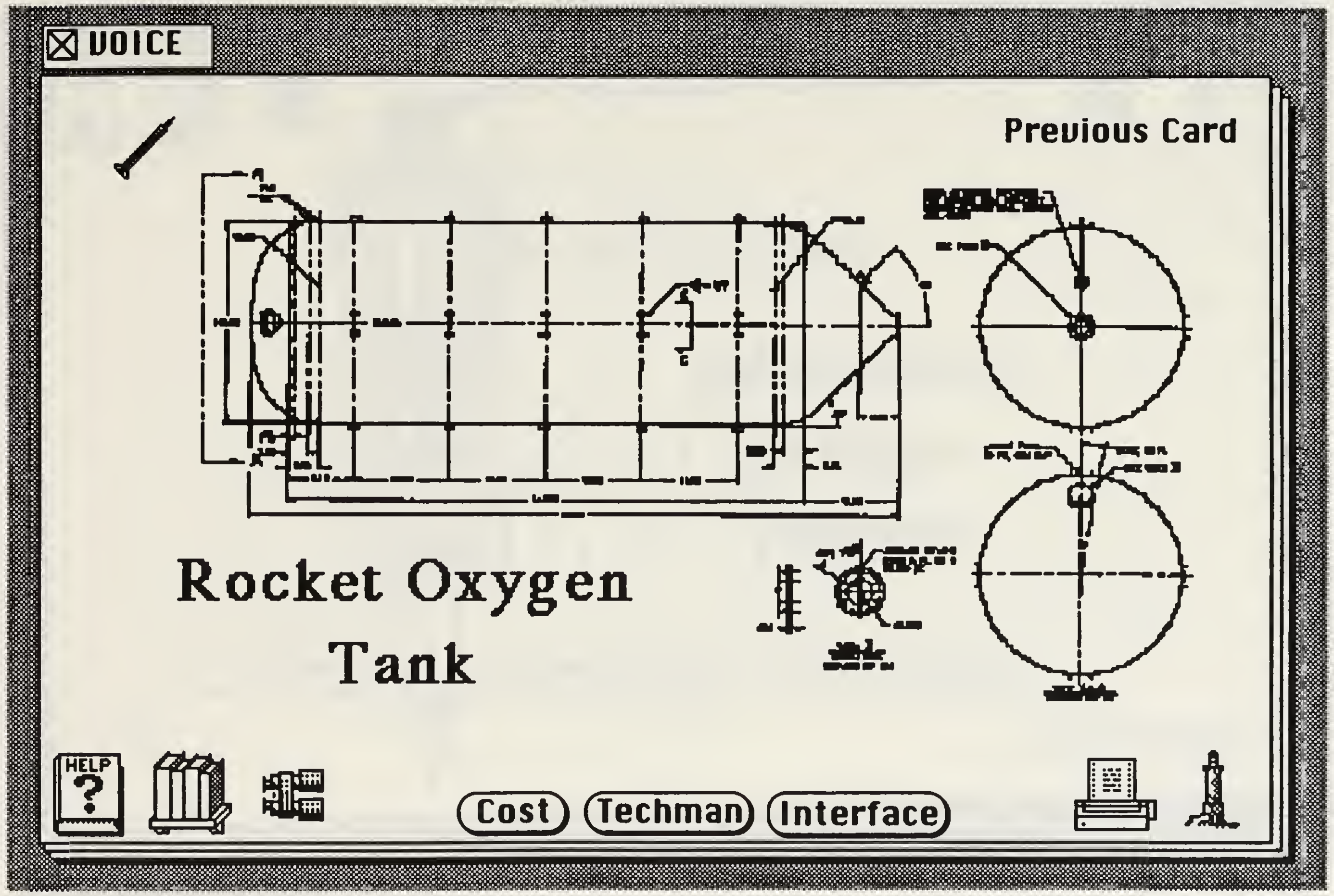
☒ VOICE
Previous Card
Rocket Oxygen Tank
HELP ?
Cost
Techman
Interface

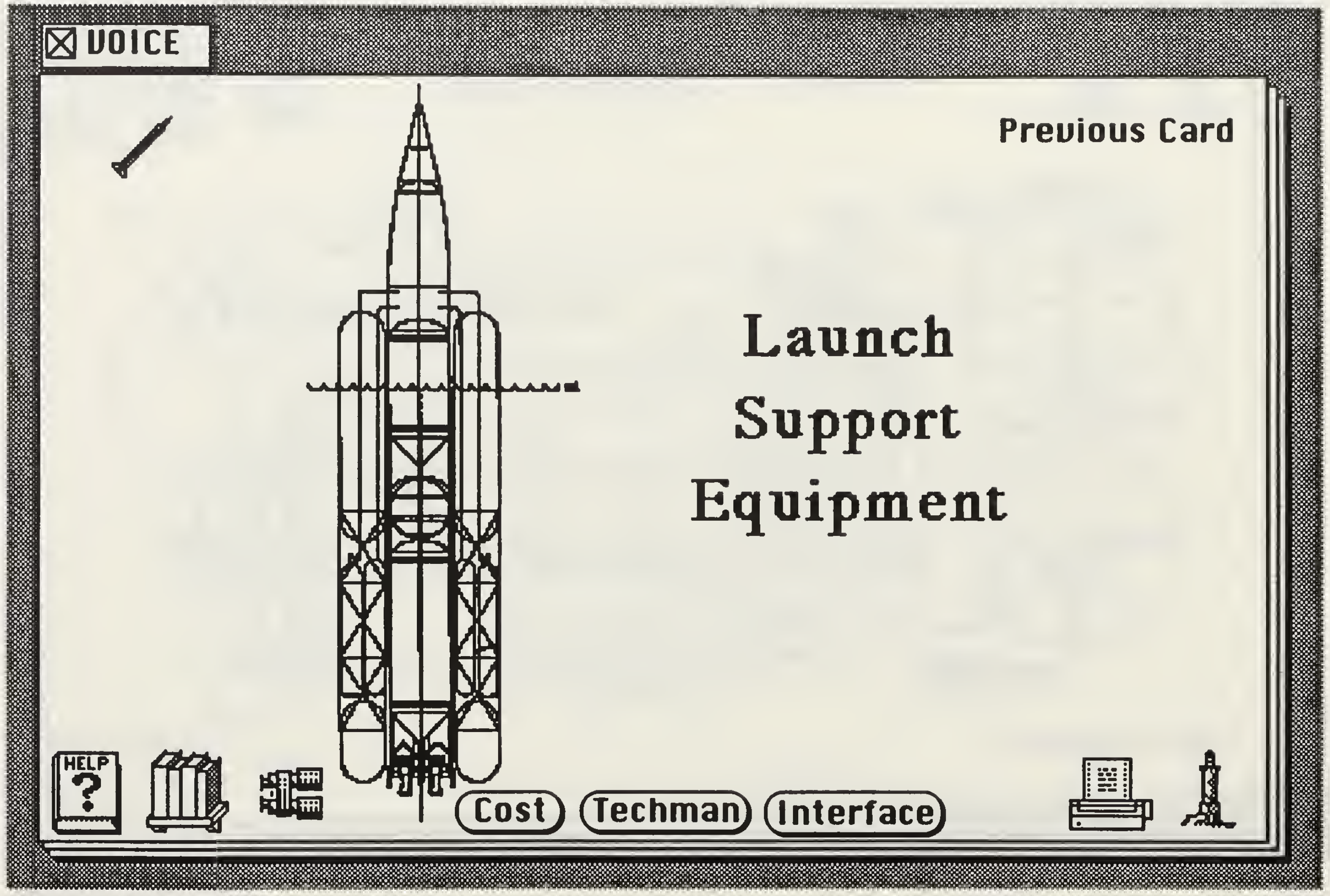

Launch
Support
Equipment

☒ VOICE
Previous Card
HELP
?
Cost
Techman
Interface

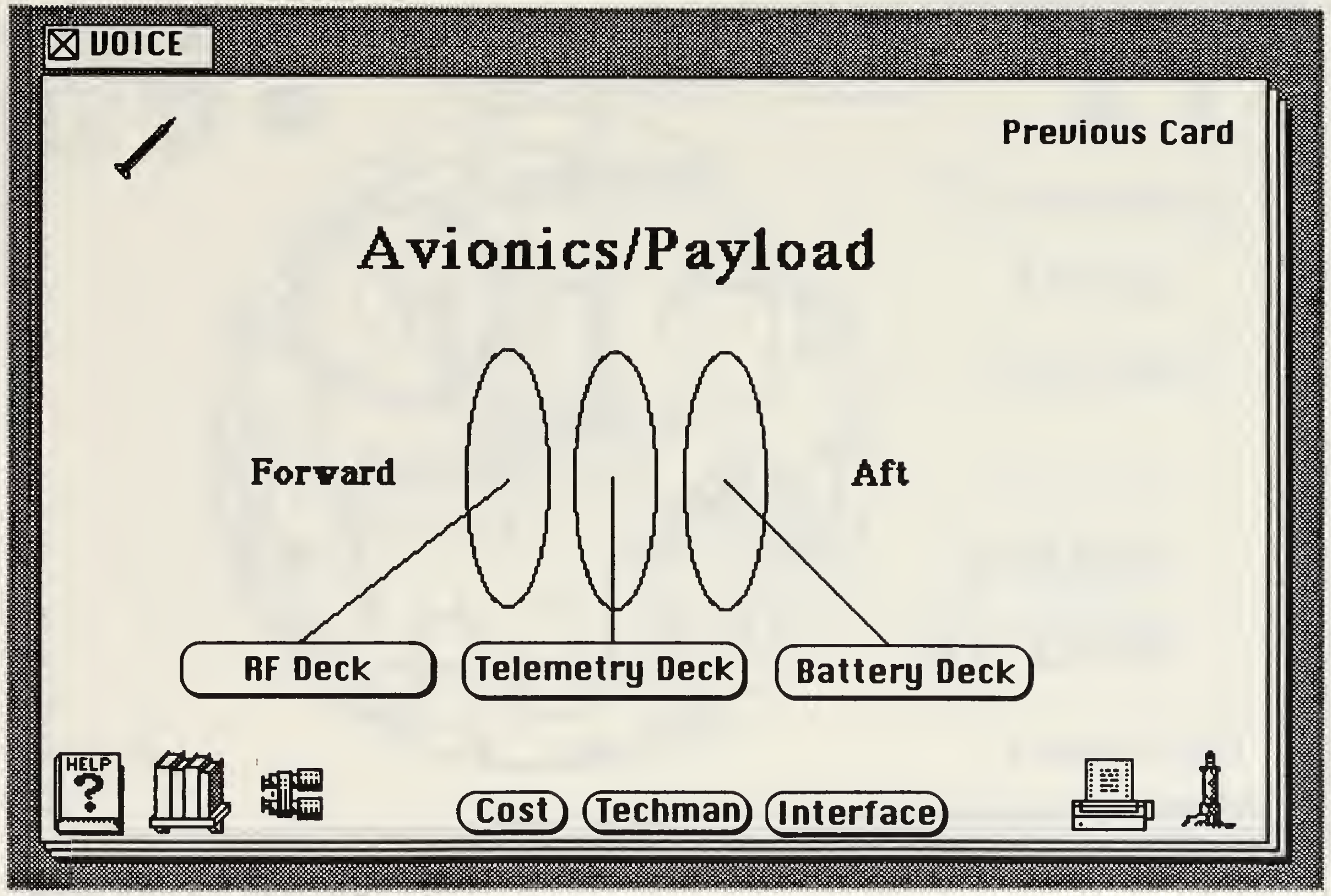
☒ VOICE
Previous Card
Avionics/Payload
Forward
Aft
RF Deck
Telemetry Deck
Battery Deck
HELP ?
Cost
Techman
Interface

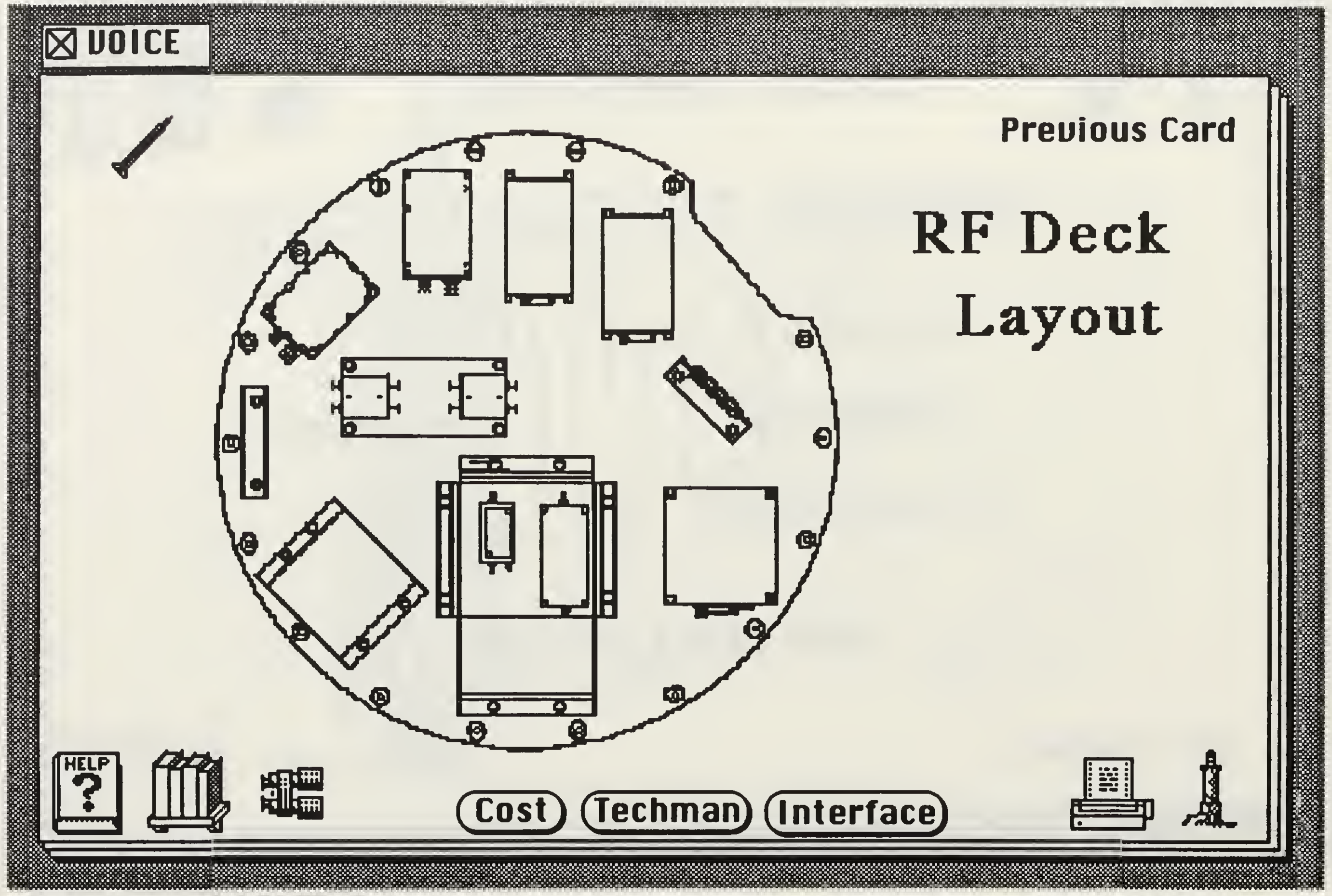
☒ VOICE
Previous Card
RF Deck
Layout
HELP
?
Cost
Techman
Interface

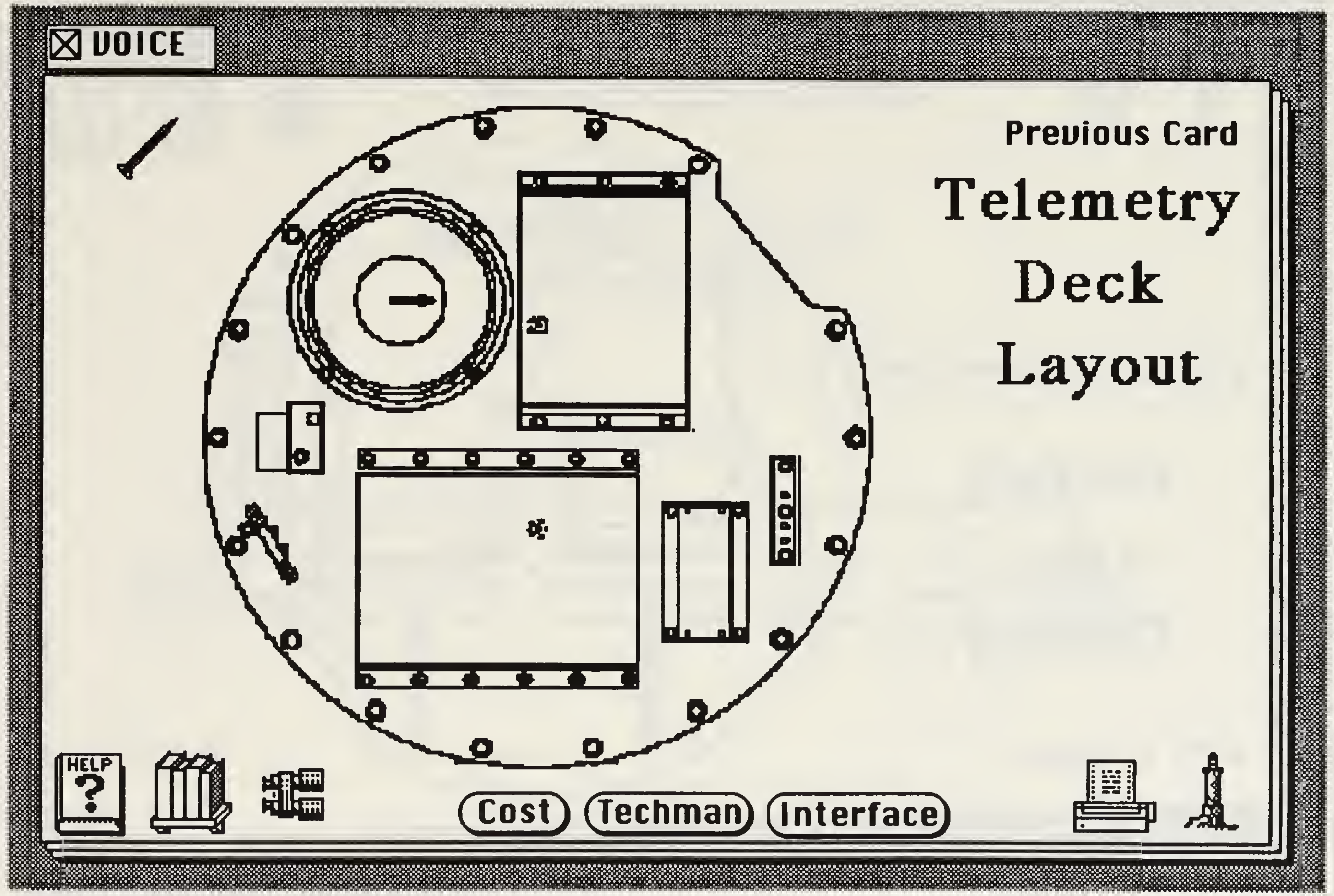
☒ VOICE
Previous Card
Telemetry
Deck
Layout
HELP ?
Cost
Techman
Interface

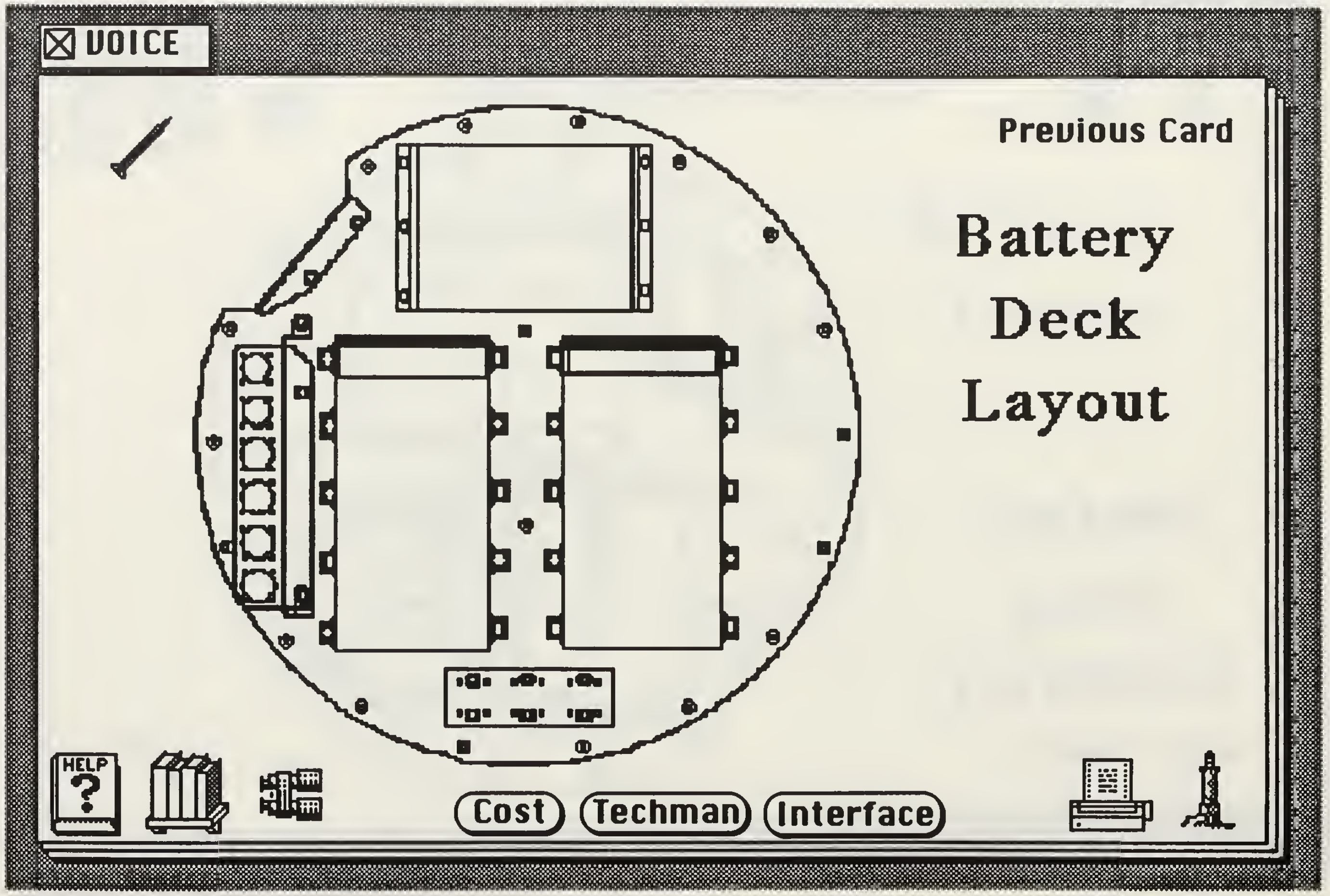

☒ VOICE
Previous Card
Battery
Deck
Layout
HELP
?
Cost
Techman
Interface

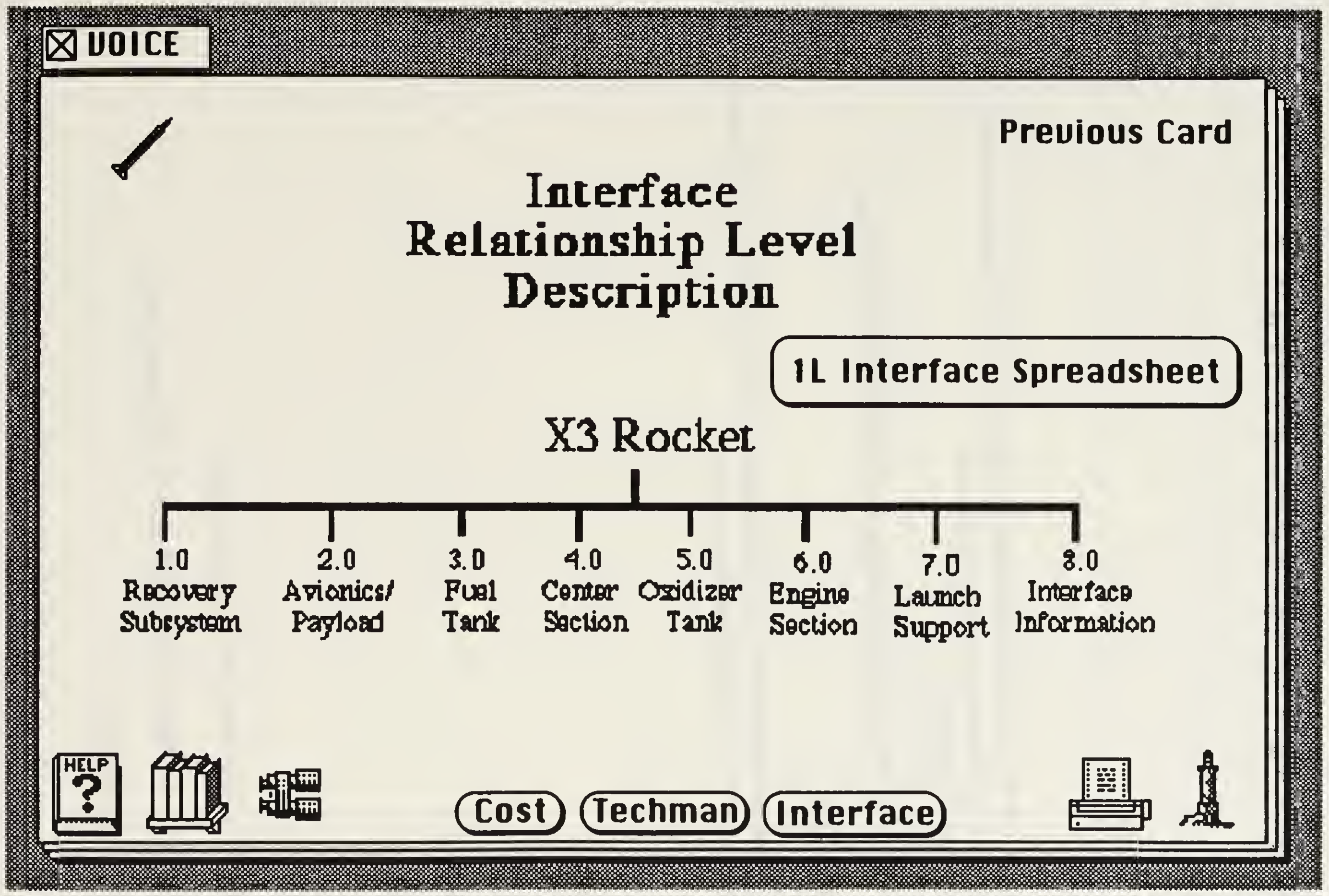
☒ VOICE
Previous Card
Interface
Relationship Level
Description
1L Interface Spreadsheet
X3 Rocket
1.0 Recovery Subsystem
2.0 Avionics/ Payload
3.0 Fuel Tank
4.0 Center Section
5.0 Oxidizer Tank
6.0 Engine Section
7.0 Launch Support
8.0 Interface Information
HELP ?
Cost
Techman
Interface

APPENDIX B

DEVELOPERS SCRIPTS

```
Script of Stack: "Argos 3:Desktop Folder:JFM:X3 Project"
-------------------------




∞∞∞∞∞∞∞∞∞∞∞∞∞∞∞∞∞∞∞∞∞∞∞∞∞∞∞∞∞∞∞∞∞∞∞∞∞∞∞∞∞∞∞∞∞∞∞∞∞∞∞∞∞∞∞∞∞∞∞∞∞∞∞∞∞∞∞∞∞∞∞∞∞∞∞
∞∞∞∞∞∞∞∞∞∞∞∞∞∞∞∞∞∞∞∞∞∞∞∞∞∞∞∞∞∞∞∞∞∞∞∞∞
Script of Stack: X3 Project

This script controls the overall operation of the SEALAR Hypercard

program and stack

∞∞∞∞∞∞∞∞∞∞∞∞∞∞∞∞∞∞∞∞∞∞∞∞∞∞∞∞∞∞∞∞∞∞∞∞∞∞∞∞∞∞∞∞∞∞∞∞∞∞∞∞∞∞∞∞∞∞∞∞∞∞∞∞∞∞∞∞∞∞∞∞∞∞∞
∞∞∞∞∞∞∞∞∞∞∞∞∞∞∞∞∞∞∞∞∞∞∞∞∞∞∞∞∞∞∞∞∞∞∞∞∞



on openStack

  global mode

  set userlevel to 5

end openStack

on closestack

  -- this handler will automatically compact stack

  if the freesize of this stack > 0.15 * the size of this stack then

    doMenu "Compact Stack"

  end if

end closestack
```

```
on gohome
  play "BYE"
end gohome

-------------------------
```

There are 2 Backgrounds in Stack: "X3 Project".

```
-------------------------
Script of Background "GRAPHIC"
-------------------------
```

* * *

Script of background: id 8104 Graphic

This script resets the stack upon termination of the program, controls the synthetic voice simulation and controls the digitized voice segments employed during program operation.

* * *

```
on closecard
  -- this handler will automatically reset cards to original state
  --  if field "Techman" is visible
  if visible of field "Techman" = true then
    set lockscreen to true
    hide field "Techman"
    repeat with i=1 to the number of buttons
      show button i
    end repeat
    show background button "sorry"
    set lockscreen to false
    hide msg
  end if
end closecard

on SEALARTALK x
  -- this handler will speak in computer voice the text contained in
  -- x.  This procedure requires several TALK XCMD's and MacinTalk
  -- must be in the system folder.
  if hilite of background button "VOICE" = true then
    TALK x, 160, 115
  end if
end SEALARTALK


on opencard
  -- this handler will speak in computer voice the text conatined in
  -- x.  This procedure requires several TALK XCMD's and MacinTalk
  -- must be in the system folder. This procedure will be invoked
  -- only if the individual card does not have an OpenCard Handler.
  --if hilite of background button "VOICE" = true then
  --TALK FIELD "Techman", 160, 115
  --end if
  show card picture
end opencard

on returnkey
  -- this is a redefinition of the returnkey function
  -- for the purposes of automating the find string command
  -- so the user may simply hit return in order to find the next
  -- occurence of a find string in both the techman field or
  -- the nomenclature field. HyperCard doesn't support this without
  -- a custom handler.

  if (char 1 to 11 of msg) = "find string" then
    put the id of this card into tempid
    if visible of field "Techman" then
      set lockscreen to true
      send returnKey to Hypercard
      if tempid <> id of this card then
        go recent card
        hide card picture
        set visible of field "Techman" to true
        repeat with i=1 to the number of buttons
          hide button i
        end repeat
      end if
      set lockscreen to false
    else
      send returnKey to Hypercard
    end if
  else
    send returnKey to Hypercard
  end if
end returnKey



-------------------------
Script of Background "SEALAR BACKGROUND I"
-------------------------
∞∞∞∞∞∞∞∞∞∞∞∞∞∞∞∞∞∞∞∞∞∞∞∞∞∞∞∞∞∞∞∞∞∞∞∞∞∞∞∞∞∞∞∞∞∞∞∞∞∞∞∞∞∞∞∞∞∞∞∞∞∞∞∞∞∞∞∞∞∞∞∞∞∞∞∞∞∞∞∞∞∞∞∞∞∞∞∞∞∞∞∞∞∞∞∞∞∞∞∞∞∞∞∞∞∞∞∞∞∞
∞∞∞∞∞∞∞∞∞∞∞∞∞∞∞∞∞∞∞∞∞∞∞∞∞∞∞∞∞∞∞∞∞∞∞∞∞∞∞∞∞∞∞∞∞∞∞∞∞∞∞∞∞∞∞∞∞

Script of background: SEALAR BACKGROUND I

This script defines the paramaters and voice qualities of the synthetic

voice employed throughout the program

∞∞∞∞∞∞∞∞∞∞∞∞∞∞∞∞∞∞∞∞∞∞∞∞∞∞∞∞∞∞∞∞∞∞∞∞∞∞∞∞∞∞∞∞∞∞∞∞∞∞∞∞∞∞∞∞∞∞∞∞∞∞∞∞∞∞∞∞∞∞∞∞∞∞∞∞∞∞∞∞∞∞∞∞∞∞∞∞∞∞∞∞∞∞∞∞∞∞∞∞∞∞∞∞∞∞∞∞∞∞
∞∞∞∞∞∞∞∞∞∞∞∞∞∞∞∞∞∞∞∞∞∞∞∞∞∞∞∞∞∞∞∞∞∞∞∞∞∞∞∞∞∞∞∞∞∞∞∞∞∞∞∞∞∞∞∞∞
```

```
on SEALARTALK x
  -- this handler will speak in computer voice the text contained in
  -- x.  This procedure requires several TALK XCMD's and MacinTalk
  -- must be in the system folder.
  TALK x, 160, 115
end SEALARTALK
```

There are 15 Cards in Stack: "ESCAP".

Script of Card "SEALAR LOGO"

* * *

Script of Card: SEALAR LOGO, id 2093

The script opens the SEALAR LOGO card, welcomes the user to the SEALAR program and then utilizes the visual effect iris close to close the card.

* * *

```
on openCard
  SEALARTALK  "Welcome to see lar,  offering cost efecteve access to space"
  visual effect iris close
  go next
end openCard
```

Script of Card "X3 Test Vehicle"

* * *

Script of card: id 8720 X3 Test Vehicle

This script opens X3 Test Vehicle card and controls the visual effects upon closing.

* * *

```
on openCard
  SEALARTALK  "X 3 test vee hickle"
  wait 5 seconds
  go next
end openCard

on closeCard
  visual effect iris close
end closeCard
```

```
-------------------------
Script of Card "X3 Subsystems"
-------------------------
```

Script of card: id 4890 X3 Subsystems

This script provides instructions to program user to enable selection of desired subsystem and controls visual effects.

```
on openCard
  SEALARTALK "X 3 Sub systum break down - please select the desired, subsystum"
end openCard

on closeCard
  visual effect iris close
end closeCard
```

```
------------------------
Script of Card "Engine Cluster"
------------------------
∞∞∞∞∞∞∞∞∞∞∞∞∞∞∞∞∞∞∞∞∞∞∞∞∞∞∞∞∞∞∞∞∞∞∞∞∞∞∞∞∞∞∞∞∞∞∞∞
∞∞∞∞∞∞∞∞∞∞∞∞∞∞∞∞∞∞∞∞∞∞∞

Script of Card:  id 5173 Engine Cluster

This script controls the synthetic voice simulation and the visual

effects employed on the card.

∞∞∞∞∞∞∞∞∞∞∞∞∞∞∞∞∞∞∞∞∞∞∞∞∞∞∞∞∞∞∞∞∞∞∞∞∞∞∞∞∞∞∞∞∞∞∞∞
∞∞∞∞∞∞∞∞∞∞∞∞∞∞∞∞∞∞∞∞∞∞∞



on openCard

  SEALARTALK "Engin cluster Assemmbly"

end openCard


on closeCard

  visual effect iris close

end closeCard


------------------------
Script of Card "Thrust Frame"
------------------------
∞∞∞∞∞∞∞∞∞∞∞∞∞∞∞∞∞∞∞∞∞∞∞∞∞∞∞∞∞∞∞∞∞∞∞∞∞∞∞∞∞∞∞∞∞∞∞∞
∞∞∞∞∞∞∞∞∞∞∞∞∞∞∞∞∞∞∞∞∞∞∞

Script of card: id 5853 Thrust Frame

This script controls operation of synthetic voice and visual effects

employed on the card.

∞∞∞∞∞∞∞∞∞∞∞∞∞∞∞∞∞∞∞∞∞∞∞∞∞∞∞∞∞∞∞∞∞∞∞∞∞∞∞∞∞∞∞∞∞∞∞∞
∞∞∞∞∞∞∞∞∞∞∞∞∞∞∞∞∞∞∞∞∞∞∞
```

```
on openCard
  SEALARTALK "Thrusst frame, specefickationns"
end openCard

on closeCard
  visual effect iris close
end closeCard
```

```
-------------------------
Script of Card "LR 101 Engine"
-------------------------
```

* * *

Script of card: id 2791 LR 101 Engine

This script controls the synthetic voice and visual effects employed on the card.

* * *

```
on openCard
  SEALARTALK "Rocket dine, L R 1 O 1 Engin"
end openCard

on closeCard
  visual effect iris close
end closeCard
```

Script of Card "Rocket Center Section"

Script of card: id 6376 Rocket Center Section

This script controls the synthetic voice and visual effects employed on the card.

```
on openCard
  SEALARTALK "Rocket center section, specifecationns"
end openCard

on closeCard
  visual effect iris close
end closeCard
```

Script of Card "Rocket Fuel Tank"

Script of card: id 6936 Rocket Fuel Tank

This script controls the synthetic voice and visual effects employed on the card.

```
on openCard
  SEALARTALK  "Rocket fuull tank, specifecationns"
end openCard

on closeCard
  visual effect iris close
end closeCard
```

Script of Card "Rocket Oxygen Tank"

Script of card: id 7530 Rocket Oxygen Tank

This script controls the synthetic voice and visual effects employed on the card.

```
on openCard
  SEALARTALK  "Rocket oxygen tank, specifecationns"
end openCard
```

```
on closeCard
 visual effect iris close
end closeCard



-------------------------
Script of Card "Launch Support Equipment"
-------------------------
∞∞∞∞∞∞∞∞∞∞∞∞∞∞∞∞∞∞∞∞∞∞∞∞∞∞∞∞∞∞∞∞∞∞∞∞∞∞∞∞∞∞∞∞∞∞∞∞∞∞∞∞∞∞∞∞∞∞∞∞∞∞∞∞∞∞∞∞∞∞∞∞∞∞∞∞∞∞∞∞∞∞∞∞∞∞∞∞∞∞∞∞∞∞∞∞∞∞∞∞∞∞∞∞∞∞∞∞
∞∞∞∞∞∞∞∞∞∞∞∞∞∞∞∞∞∞∞∞∞∞∞∞∞∞∞∞∞∞∞∞∞∞∞∞∞∞∞∞∞∞∞∞∞∞

Script of card:  id 8576 Launch Support Equipment

This script controls the synthetic voice and visual effects employed

on the card.


∞∞∞∞∞∞∞∞∞∞∞∞∞∞∞∞∞∞∞∞∞∞∞∞∞∞∞∞∞∞∞∞∞∞∞∞∞∞∞∞∞∞∞∞∞∞∞∞∞∞∞∞∞∞∞∞∞∞∞∞∞∞∞∞∞∞∞∞∞∞∞∞∞∞∞∞∞∞∞∞∞∞∞∞∞∞∞∞∞∞∞∞∞∞∞∞∞∞∞∞∞∞∞∞∞∞∞∞
∞∞∞∞∞∞∞∞∞∞∞∞∞∞∞∞∞∞∞∞∞∞∞∞∞∞∞∞∞∞∞∞∞∞∞∞∞∞∞∞∞∞∞∞∞∞



 on openCard
 SEALARTALK  "Launch support equipment.. design presently under revision"
 end openCard


on closeCard
 visual effect iris close
end closeCard

-------------------------
```

Script of Card "Avionics/Payload"

∞∞
∞∞∞∞∞∞∞∞∞∞∞∞∞∞∞∞∞∞∞∞∞∞∞∞∞∞

Script of card: id 7766 Avionics/Payload

This script controls the synthetic voice and visual effects employed

on the card.

∞∞
∞∞∞∞∞∞∞∞∞∞∞∞∞∞∞∞∞∞∞∞∞∞∞∞∞∞

```
 on openCard
 SEALARTALK  "Avey onics, and payload"
 end openCard


on closeCard
 visual effect iris close
end closeCard
```

Script of Card "RF Deck Layout"

∞∞
∞∞∞∞∞∞∞∞∞∞∞∞∞∞∞∞∞∞∞∞∞∞∞∞∞∞

Script of card: id 9162 RF Deck Layout

This script controls the synthetic voice and visual effects employed

on the card.

* * *

```
 on openCard
 SEALARTALK "R F deck, lay out"
 end openCard


on closeCard
 visual effect iris close
end closeCard
```

Script of Card "Telemetry Deck"
----

* * *

Script of card: id 9986 Telemetry Deck

This script controls the synthetic voice and visual effects employed on the card.

* * *

```
on openCard
 SEALARTALK  "Telem ettry, deck, lay out"
end openCard


on closeCard
```

```
  visual effect iris close
end closecard
```

Script of Card "Battery Deck"

∞∞
∞∞

Script of card: id 10249 Battery Deck

This script controls the synthetic voice and visual effects employed on the card.

∞∞
∞∞

```
on openCard
  SEALARTALK  "Batt tery, deck, lay out"
end openCard


on closeCard
  visual effect iris close
end closeCard
```

Script of Card "Interface Relationships"

∞∞
∞∞

Script of card: id 11402 Interface Relationships

This script controls the synthetic voice and visual effects employed on the card.

```
on openCard
  SEALARTALK  "First level interface relationship description"
end openCard


on closeCard
  visual effect iris close
end closeCard
```

```
------------------------
There are 6 Background Fields  on Background "GRAPHIC".
------------------------
Script of Background Field X3 Test Vehicle of Background GRAPHIC
------------------------
on mouseUp
  go to card "X3 SUBSYSTEMS"
end mouseUp

------------------------
Script of Background Field BUTTONS of Background GRAPHIC
------------------------
on mouseup
  GLOBAL CARDID
  put CARDID into SECOND ITEM OF line¬
  (clickline()) of field "DATA"

  SET VISIBLE OF FIELD "BUTTONS" TO FALSE
  show card picture
  REPEAT WITH COUNT = 1 TO NUMBER OF CARD BUTTONS
    set visible of button COUNT to true
  END REPEAT
end mouseup

------------------------
Script of Background Field data of Background GRAPHIC
------------------------
-- EACH LINE NUMBER OF THE FIELD CONTAINS TWO DATA ITEMS WHICH
-- CORRESPOND TO A BUTTON NUMBER. I.E. LINE 1 CONTAINS DATA FOR
BUTTON 12

-- THE FIRST ITEM IS THE CARD ID OF THE CHILD OF THIS ITEM

-- THE SECOND ITEM IS THE CARD ID OF THE CARD IN THE STACK WHICH
-- CORRESPONDS TO THIS ITEM
------------------------
Script of Background Field Techman of Background GRAPHIC
------------------------
on mouseup
  -- this handler turns show field "description" off and on
  -- show the card picture with associated buttons on.

  lock screen
  show card picture
  set the highlight of background btn "VOICE" to true
  set visible of field "Techman" to false
  repeat with i=1 to the number of buttons
    show button i
  end repeat

  repeat with i=1 to the number of cd buttons
```

```
   show cd button i
  end repeat

  repeat with i=1 to the number of cd fields
    show cd fld i
  end repeat
  lock screen

end mouseup



------------------------
There are 0 Background Fields  on Background "SEALAR BACKGROUND I".
------------------------
There are 0 Card Fields on Card "SEALAR LOGO"
------------------------
There are 1 Card Fields on Card "X3 Test Vehicle"
------------------------
There are 8 Card Fields on Card "X3 Subsystems"
------------------------
Script of Card Field "card field id 3" of Card "X3 Subsystems"
------------------------
on mouseUp
  go to card "Engine Cluster"
end mouseUp

------------------------
Script of Card Field "card field id 4" of Card "X3 Subsystems"
------------------------
on mouseUp
  go to card "ROCKET OXYGEN TANK"
end mouseUp
------------------------
Script of Card Field "card field id 5" of Card "X3 Subsystems"
------------------------
on mouseUp
  go to card "ROCKET CENTER SECTION"
end mouseUp
------------------------
Script of Card Field "card field id 6" of Card "X3 Subsystems"
------------------------
on mouseUp
  go to card "ROCKET FUEL TANK"
end mouseUp
------------------------
Script of Card Field "card field id 8" of Card "X3 Subsystems"
------------------------
on mouseUp
  go to card "AVIONICS/PAYLOAD"
end mouseUp
```

```
-------------------------
Script of Card Field "card field id 9" of Card "X3 Subsystems"
-------------------------
on mouseUp
  SEALARTALK "RECOVERY SUBSYSTUM PRESENTLY NOT MOD ELLED"
  go to card "RECOVERY SUBSYSTEM"
end mouseUp
-------------------------
There are 2 Card Fields on Card "Engine Cluster"
-------------------------
There are 1 Card Fields on Card "Thrust Frame"
-------------------------
There are 0 Card Fields on Card "LR 101 Engine"
-------------------------
There are 1 Card Fields on Card "Rocket Center Section"
-------------------------
There are 1 Card Fields on Card "Rocket Fuel Tank"
-------------------------
There are 1 Card Fields on Card "Rocket Oxygen Tank"
-------------------------
There are 1 Card Fields on Card "Launch Support Equipment"
-------------------------
There are 0 Card Fields on Card "Avionics/Payload"
-------------------------
There are 0 Card Fields on Card "RF Deck Layout"
-------------------------
There are 0 Card Fields on Card "Telemetry Deck"
-------------------------
There are 0 Card Fields on Card "Battery Deck"
-------------------------
There are 0 Card Fields on Card "Interface Relationships"
-------------------------
There are 15 Background Buttons  on Background "GRAPHIC".
-------------------------
Script of Background Button "Techman" of Background "GRAPHIC"
-------------------------
```

* * *

Script of background button: id 4 Techman

This script controls the transition between the HyperCard stack and the text reference, allowing the user to obtain technical information with minimal effort.

* * *

```
on mouseUp
 -- this handler toggles between showing field "Techman" and
 -- showing the card picture with associated buttons.
 PLAY "TECHMAN"

 if visible of field "Techman" = true then
  Lock Screen
  set the highlight of background btn "VOICE" to true
  hide field "Techman"
  show card picture
  set scroll of field "Techman" to 1
  repeat with i=1 to the number of buttons
   show button i
  end repeat

  repeat with i=1 to the number of cd buttons
   show cd button i
  end repeat

  repeat with i=1 to the number of cd fields
   show cd fld i
  end repeat
  unlock screen

 else
  lock screen
  hide card picture
  show field "Techman"
  set scroll of field "Techman" to 1
  repeat with i=1 to the number of buttons
   hide button i
  end repeat

  repeat with i=1 to the number of cd buttons
   hide cd button i
  end repeat

  repeat with i=1 to the number of cd fields
   hide cd fld i
  end repeat
  Unlock screen

 end if

end mouseUp
```

```
------------------------
Script of Background Button "Cost" of Background "GRAPHIC"
------------------------


on mouseUp
  open "X3-Spreadsheet" with "Microsoft Excel 3.0"
end mouseUp


------------------------
Script of Background Button "HELP" of Background "GRAPHIC"
------------------------
on mouseUp
  PLAY "HELP"
  push this card
  go to stack "SEALAR HELP"
end mouseUp

------------------------
Script of Background Button "Previous Card" of Background "GRAPHIC"
------------------------
on mouseUp
  -- goes back to previous view level
  visual effect iris close
  go back
end mouseUp

------------------------
Script of Background Button "UP" of Background "GRAPHIC"
------------------------
on mouseUp
  -- goes up the hierarchy
  --visual effect zoom out
  --go to card id field "Uplink"
  visual effect iris close
  GO TO CD "X3 Subsystems"
end mouseUp

------------------------
Script of Background Button "Find" of Background "GRAPHIC"
------------------------
∞∞∞∞∞∞∞∞∞∞∞∞∞∞∞∞∞∞∞∞∞∞∞∞∞∞∞∞∞∞∞∞∞∞∞∞∞∞∞∞∞∞∞∞∞∞∞∞∞∞∞∞∞∞∞∞∞∞∞∞∞∞∞∞∞∞∞∞∞∞∞∞∞∞∞∞∞∞∞∞
∞∞∞∞∞∞∞∞∞∞∞∞∞∞∞∞∞∞∞∞∞∞∞∞∞∞∞∞∞∞∞∞∞∞∞∞∞∞∞∞∞∞
Script of button:  id 30 Find
```

This script controls the operation of the modified search for the desired

string through the field "Techman."

* * *

```
on mouseUp
  -- this handler provides for a modified search.
  put the id of this card into tempid
  PLAY "SEARCH"
  ask"Please enter Search String."
  put it into Goal
  if visible of field "TECHMAN" then
    set lockscreen to true
    set the highlight of background btn "VOICE" to false
    put "find string" && quote & Goal & quote && "in field Techman"¬
    into msg
    hide msg
    send returnkey to hypercard
    if tempid <> id of this card then
      go recent
      set the highlight of background btn "VOICE" to true
      set lockscreen to false
    end if
  else
    lock screen
    hide card picture
    show field "Techman"
    set scroll of field "Techman" to 1
    repeat with i=1 to the number of buttons
      hide button i
    end repeat

    repeat with i=1 to the number of cd buttons
      hide cd button i
    end repeat

    repeat with i=1 to the number of cd fields
      hide cd fld i
    end repeat
    Unlock screen

    hide msg
    put "find string" && quote & Goal & quote && "in field TECHMAN" into msg
    hide msg
    send returnkey to hypercard
  end if
end mouseUp




------------------------
```

```
Script of Background Button "LIBRARY" of Background "GRAPHIC"
------------------------
on mouseUp
  PLAY "LIBRARY"
  push card
  go to card library OF STACK "SEALAR"
end mouseUp

------------------------
Script of Background Button "EXIT" of Background "GRAPHIC"
------------------------
on mouseUp
  gohome
  go home
end mouseUp


------------------------
Script of Background Button "PRINT" of Background "GRAPHIC"
------------------------
on mouseUp
  play "PRINT"
  doMenu Print Card
end mouseUp

------------------------
Script of Background Button "GRAPHICS REWRITE" of Background "GRAPHIC"
------------------------
on mouseup
  REPEAT WITH COUNT = 1 TO NUMBER OF CARD BUTTONS
    set the script of button COUNT to¬
    "-- Graphic Handler may be found in this cards background"¬
    & return & "On MouseUp" & return &¬
    "GRAPHIC (number of me)" & return & "end MouseUp"
  end repeat
end mouseup

------------------------
Script of Background Button "VOICE" of Background "GRAPHIC"
------------------------
on mousedown
  -- toggles voice on/off
  if the hilite of me then
    SEALARTALK "VOICE ONN"
  else
    TALK "VOICE OFF", 160, 115
  end if
end mousedown

------------------------
Script of Background Button "INSERT PARTNUMBER" of Background "GRAPHIC"
```

```
-------------------------
on mouseUp
  GLOBAL BUTTONNAME
  GLOBAL CARDID
  PUT EMPTY INTO BUTTONNAME
  PUSH CARD
  ASK "INPUT PARTNUMBER"
  GO TO STACK COSAL
  FIND IT IN FIELD "PART NUMBER"
  PUT SHORT ID OF THIS CARD INTO CARDID
  POP CARD
  hide card picture
  REPEAT WITH COUNT = 1 TO NUMBER OF CARD BUTTONS
    set visible of button COUNT to false
  END REPEAT
  IF FIELD "BUTTONS" IS EMPTY THEN
    REPEAT WITH COUNT = 1 TO NUMBER OF CARD BUTTONS
      PUT ((short name of CARD BUTTON COUNT) & "," & COUNT¬
      & RETURN) AFTER FIELD "BUTTONS"
    END REPEAT
  END IF
  ANSWER "PLEASE SELECT BUTTON NAME"
  SET VISIBLE OF FIELD "BUTTONS" TO TRUE
end mouseUp

-------------------------
Script of Background Button "NONE,NONE" of Background "GRAPHIC"
-------------------------
on mouseUp
  ANSWER "ARE YOU SURE"
  IF IT <> "OK" THEN EXIT MOUSEUP
  REPEAT WITH COUNT = 1 TO NUMBER OF CARD BUTTONS
    PUT "NONE, NONE" INTO LINE COUNT OF FIELD "DATA"
  END REPEAT
end mouseUp

-------------------------
Script of Background Button "SOMETHING,NONE" of Background "GRAPHIC"
-------------------------
on mouseUp
  ANSWER "ARE YOU SURE"
  IF IT <> "OK" THEN EXIT MOUSEUP
  REPEAT WITH COUNT = 1 TO NUMBER OF CARD BUTTONS
    PUT (CHAR 17 TO 25 OF LINE 4 OF THE SCRIPT OF BUTTON COUNT)¬
    & ", NONE" INTO¬
    LINE COUNT OF FIELD "DATA"
  END REPEAT
end mouseUp

-------------------------
Script of Background Button "Interface" of Background "GRAPHIC"
```

```
-------------------------

on mouseUp
  go to card "Interface Relationships"
end mouseUp

-------------------------
There are 0 Background Buttons  on Background "SEALAR BACKGROUND I".
-------------------------
There are 0 Card Buttons on Card "SEALAR LOGO".
-------------------------
There are 0 Card Buttons on Card "X3 Test Vehicle".
-------------------------
There are 7 Card Buttons on Card "X3 Subsystems".
-------------------------
Script of Card Button "Engine Section" of Card "X3 Subsystems"
-------------------------
on mouseUp
  go to card "Engine Cluster"
end mouseUp


-------------------------
Script of Card Button "Avionics/Payload" of Card "X3 Subsystems"
-------------------------

on mouseUp
  go to card "AVIONICS/PAYLOAD"
end mouseUp

-------------------------
Script of Card Button "Recovery Subsection" of Card "X3 Subsystems"
-------------------------

on mouseUp
  SEALARTALK "RECOVERY SUBSYSTEM PRESENTLY NOT MODELLED"
  go to card "RECOVERY SUBSYSTEM"
end mouseUp

-------------------------
Script of Card Button "Fuel Tank" of Card "X3 Subsystems"
-------------------------
on mouseUp
  go to card "ROCKET FUEL TANK"
end mouseUp


-------------------------
Script of Card Button "Helium Tank" of Card "X3 Subsystems"
-------------------------
on mouseUp
```

used for vernier steering of the Atlas, Delta and Thor launch vehicles. In the X3 vehicle, each engine is pivoted along one axis. The cluster of 4 gimballed engines provide complete yaw, pitch and roll control. The engines are operated at a relatively low chamber pressure of 360 psi.

Engines:

The Rocketdyne LR-101 engines are regeneratively cooled by passing the fuel through the nozzle and throat regions prior to thrust chamber injection.

Rocketdyne LR-101 rocket engine specifications (single chamber):

Propellants:

Oxidizer..............................	Liquid Oxygen (LOX)
Fuel..................................	RP-1 (Kerosene)

Thrust chamber physical characteristics:

Combustion chamber

Diameter............................	2.73 in
Volume.............................	41.76 in^3
Area.................................	5.86 in^2
Characteristic length...............	20.00 in
Contraction 1/2 angle.............	15 degrees
Expansion 1/2 angle...............	15 degrees

Nozzle:

Throat diameter	1.63 in
Exit diameter	3.87 in
Expansion ratio	5.622 :1
Throat area	2.088 in^2
Exit area	11.74 in^2
Weight (approx)	12.0 lb

Steady state performance:

Thrust (sea level)	1007.5 lbf
Thrust (vacuum)	1180.4 lbf
Specific impulse (Isp)	205.4 sec^{-1}
Chamber pressure	360.0 psi
Mixture ratio	1.9:1
Fuel flow rate	1.692 lb/sec
Oxidizer flow rate	3.214 lb/sec
Characteristic velocity (C*)	4930. ft/sec
Thrust coefficient	1.340 (sea level)
Thrust coefficient	1.570 (vacuum)
Injector pressure drop	275. psid

The LR-101 engines are started by pressurizing the fuel and LOX tanks, firing an igniter in each engine, verifying correct igniter operation and opening the EFV and LOX valves.

The engines are ignited by a set of pyrotechnic igniters inserted into each engine throat. Each igniter is a single shot device using a solid propellant charge of hydroxyl-terminated polybutadiene, ammonium perchlorate plus magnesium. The charge is ignited using a standard Atlas electric match coupled through a BKNO3 tablet. The entire charge is contained within the phenolic tube. The flame exits through opposing vents directly into the thrust chamber. The igniter is held in the thrust chamber by an aluminum spider bracket.

Correct igniter operation is verified by a thermocouple attached to each igniter. It is imperative that all igniters are burning prior to the start of fuel and LOX flow or a hard start may result. A hard start is an explosion internal to an engine caused by an external flame source propagating rearward into the engine. A hard start may result in a substantial overpressure which can permanently damage the engine. The igniter is ejected approximately 1/2 second after the engine start when the aluminum spider melts.

After engine burnout, the propellant valve is closed to retain helium pressure to enhance the fuel and LOX tank strength during reentry. Engine burnout is identified by monitoring the thrust chamber pressure. Burnout is at 180 psi corresponding to 50% of nominal chamber pressure. Residual pressure in the tanks strengthens them during water impact. After landing, the tanks are vented (made safe) either by an RF command or manually.

The smaller propulsion system valves are directly controlled by electrical solenoids. The larger valves such as the EFV and LOX valves are operated by helium pneumatic pressure using small solenoid pilot valves for control. Pressure transducers are installed on the helium, fuel and LOX tanks. An additional pressure transducer is installed on one engine to monitor chamber pressure during flight.

During the static test firing phase, additional transducers are included. Examples of additional transducers include fuel and LOX flow rates, chamber pressures for all engines and helium heat exchanger temperatures.

Thrust vector control:

The rocket steering is controlled by a Thrust Vector Controller (TVC). Each of the four LR-101 rocket engines can be swiveled on one axis by a hydraulic actuator. The engine swivel range is 10 degrees, providing a maximum two-engine lateral control thrust of 350 pounds. When opposite engine pairs are moved together, yaw or pitch control are obtained. Roll control is obtained by moving opposite pairs differentially. The command signals to the TVC originate in the Flight Control Computer (FCC).

The actuators are controlled by Moog proportional servo valves. The pressurized fluid for the hydraulic actuators is RP-1 rocket fuel supplied directly from the fuel tank at 575 psi. No boost pumps are used. The servo valve output is dumped overboard. The actuator position is sensed by a Linear Voltage Differential Transformer (LVDT) and signal conditioner assembly providing a voltage proportional to engine gimbal angle. The LVDT is rugged and well protected from saltwater effects.

A servo controller compares the FCC commands with the LVDT sensed actuator positions. The error signal is used to control the servo valve so as to null the position error. The small signal bandwidth is 18 Hz because of the low hydraulic pressure, the system becomes slew rate limited (130/sec) with a 4.5 Hz large signal bandwidth (Witham, 1990).

The maximum yaw and pitch thrust is limited to approximately 350 pounds by a 10 degree gimbal angle. The lateral thrust is converted into a moment as a function of distance between the engines and the time varying center of gravity location. If the vehicle reaches a sufficiently high angle of attack (α) at a high dynamic pressure (q), an insufficient control authority may allow the rocket to become unstable. Typically, the most critical flight regime is in the peak dynamic pressure (max q) region, near 30,000 ft. In this region, the angle of attack is limited to approximately 5 degrees. Substantial wind shears induced by jet streams are common at this altitude. Because of an unacceptable control authority, small fins have been added near the tail to shift the center of pressure rearward.

Recovery system:

The X3 rocket is recovered after use by a pair of parachutes. At 10,000 feet, a drogue parachute is deployed by a drogue gun controlled by the FCC. The drogue parachute is an

8 foot diameter Kevlar hemi-flo design manufactured by Paranetics. This Kevlar drogue parachute was initially designed for a different version of the X3 rocket which required a very high altitude drogue parachute deployment.

In this version of the X3, the drogue parachute is used to provide the initial deceleration, extract the main chute and for propellant settling in certain abort situations. During an abort, the drogue parachute i [redacted] ? ear of the rocket. The fuel and LOX settling is owing a dump through the engine. In order t nd the LOX is dumped overboard first. Later, imped overboard.

The main parachute is deployed at ute is used to extract the main chute from a c achute is disreefed to a diameter of 46 feet. The rocket enters the water tail first at 32 feet per second. The fuel and LOX tanks are pressurized at water entry to provide additional strength.

After landing, a radio beacon, dye marker and flashing light assist in locating the vehicle.

X3 vehicle weight summary (10/10/90):

Primary tank structure	344.0
Fuel tank	
Center section structure	
Helium tank	
LOX tank	
Instrument bulkhead	
Oxygen subsystem	
Pressure vent valve	1.25
Tank level sensor probe	3.5
Plumbing, wiring, misc	3.25

Fuel subsystem

	Pressure / vent valve	1.25
	Tank level sensor probe	3.0
	Plumbing, wiring, misc	5.0

Engine section

	Engine assembly	75.5
	Egg crate	18.5
	Instrumentation	10.0
4	Jacket flowmeters	00.8
4	Flex lines	2.0
4	TVS actuators	7.2

Raceway assembly

4	Helium heat exchangers	15.0
4	Raceway covers	12.0
	Wiring	5.0

Drag bags

4	Drag bags	12.0
	Drag bag packing	20.0
	Fins	15.0

Center section assembly

4	Prop utilization / emerg valves	3.0
2	PU solenoid valves	2.5
	Helium regulator	4.0
	3/4" check valve	4.0
	LOX pressure / vent pilot valve	1.25
	Fuel pressure / vent pilot valve	1.25
	LOX tank overpressure switch	1.0
	Fuel tank overpressure switch	1.0
	Helium tank pressure transducer	1.0
	Fuel tank pressure transducer	0.75
	LOX tank pressure transducer	0.75
	Helium relief valve	0.25
3	Temperature probes	0.25
	Plumbing, wiring, misc	8.0

Nose section	
Outer skin	26.0
Locking ring	7.5
Locking ring seal	1.0
Main parachute	24.5
Drogue parachute	4.5
Drogue chute release & mortar	12.5
Drogue chute skin	2.5
Ring bulkhead and seal	3.0
Honeycomb floor	5.0
Recovery beacon	4.0
Dye marker	1.0
Plumbing, wiring, misc	15.0
Avionics / payload	266.45
Fluids	
Helium	29.8
Residual fuel	14.0
Residual LOX	0.0
Burnout weight	1000.0
Useable fuel	685.0
Useable LOX	1294.0
Launch weight	2979.0

References:

Anon, LR1-1-NA-11 Vernier Engine Data Sheet, Rocketdyne, Canoga Park, CA (undated)

Describes the performance of the LR-101 engine used by the X3 rocket.

Huzel and Huang, Design of Liquid Propellant Rocket Engines, NASA Special Publication SP-125, National Aeronautics and Space Administration, Washington, DC, (1971)

An excellent overview of liquid rocket engine design.

Ring, E., Rocket Propellant and Pressurization Systems, Prentice- Hall, Englewood Cliffs, N.J. (1964)

Describes the design of pressurization systems for pressure fed rockets.

Truax, R. C., Proposal for the SEALAR Program, TEI, Saratoga, CA (1987)

This document describes the overall SEALAR project.

Witham, P., X3 Swivel Test Plots and Data File, TEI internal publication, Carlsbad, CA (10/13/90)

Describes the servo response test measurements taken during the 9/20/90 X3 static firing test. (Ref. 13)

APPENDIX D

COST ANALYSIS SPREADSHEETS

Item N	Subsystem	Item Description	Qty Req'd	Part Num. or Spec.	Subcontractor or Ven	Cost/Unit	Cost
P00001	Propulsion	COUPLING NUT	100	AN 818	PARKER	1	100
P00002	Propulsion	TEE - FLARED TUBE	20	AN 824	PARKER	3	60
P00003	Propulsion	90 degree ELBOW ASSEMBLY	10	AN 833,AN 924,AN 818	PARKER	5	50
P00004	Propulsion	NUT - FLARED TUBE BULKHEAD	10	AN 924	PARKER	3	30
5	Propulsion	UNION NUT	10	AN 805	PARKER	3	30
6	Propulsion	SH 90 degree BLK ELBOW ASSEM	1	AN 833,AN 924,AN 818	TEI	10	10
7	Propulsion	GOLD-DOME HELIUM SUPPLY REG	1	STERER 15780-13	STERER	1000	1000
8	Propulsion	CUSTOM HEAT EXCH. ELBOW	4		TEI	10	40
9	Propulsion	FLARED TUBE & FLANGED 45' ELB	5	AN 761	PARKER	3	15
10	Propulsion	PRESSURE SWITCH	1	SWI #1510	SWI	100	100
11	Propulsion	FLARED TUBE BULKHEAD UNION	10	AN 832	PARKER	3	30
12	Propulsion	PILOT VALVE FOR FUEL P.U. VALVE	2	MAROTTA MV74 (P-102	MAROTTA	100	200
13	Propulsion	PILOT VALVE FOR EMERG FUEL C/0	2	MAROTTA MV74 (P-102	MAROTTA	100	200
14	Propulsion	LOX TANK PRESSURE	1	RHUCOR #3-U-3055 (P-1	KELLER	500	500
15	Propulsion	CENTER SECTION He REGULATOR	1	CORNELIUS 114D100-9	CORNELIUS	200	200
16	Propulsion	REGULATED He PRESS. TRANSDUCER	1	P-114	KELLER	500	500
17	Propulsion	He TANK PRESSURE TRANSDUCER	1	P-110	KELLER	500	500
18	Propulsion	FUEL VENT/PRESSURIZATION VALVE	1	PROTCOUR 1031-2	PROTCOUR	500	500
19	Propulsion	CENT. SECTION PRESS. TRANSDUCER	1		KELLER	500	500
20	Propulsion	LOX TANK PRESSURE TRANSDUCER	1	P-111	KELLER	500	500
21	Propulsion	GREEN SPRING OVERBOARD VENT	1	JETTRON 910900	ROCKETDYNE	20	20
22	Propulsion	EMERVENCY FUEL CUT-OFF VALVES	2	TEI	TEI	500	1000
23	Propulsion	FUEL PROP. UTILIZATION (PU) VALVE	2	TEI	TEI	500	1000
24	Propulsion	BULKHEAD TEE - FLARED TUBE	5	AN834	PARKER	3	15
25	Propulsion	3/8" DIA TO 1/4"DIA ADAPTER	5		PARKER	3	15
26	Propulsion	QUICK RELEASE FUEL FILL CONNECT	1	Z-663VSS-4-T6 S. WILS	SEATON-WILSON	35	35
27	Propulsion	FUEL TANK PRESSURE TRANSDUCES	1	BOURNS P-112	KELLER	500	500
28	Propulsion	PRESSURE SWITCH	1	SWI	SWI	100	100
29	Propulsion	ABORT RELIEF VALVE	1	CIRCLE SEAL K5120T-1	CIRCLE SEAL	100	100
30	Propulsion	CENT. SECT. EQUALIZATION CK. VLV	1		KOHLER	50	50
31	Propulsion	HELIUM BULKHEAD	1		TEI	1000	1000
32	Propulsion	LOX LINE ORIFICE	4		TEI	10	40
33	Propulsion	FUEL LINE ORIFICE	2		TEI	10	20
34	Propulsion	LOX DOME PRESSURE TRANSDUCER	4	KELLER PSI	KELLER	500	2000
35	Propulsion	FUEL INJECTOR PRESSURE TRANSDU	4	KELLER PSI	KELLER	500	2000
36	Propulsion	CHAMBER PRESSURE TRANSDUCER	4	KELLER PSI	KELLER	500	2000
37	Propulsion	LOX TRANSFER SLEEVE	4		ROCKETDYNE	10	40
38	Propulsion	PILOT VLV. FOR PROP. FEED VALVE	1	MAROTTA MV531	MAROTTA	500	500
39	Propulsion	LOX PURGE VALVE	1		RHUCOR	200	200
40	Propulsion	PROPELLANT FEED VALVE	1		TEI	1000	1000
41	Propulsion	FUEL FILTER	4	ME 286	ME	50	200
42	Propulsion	SERVO ENGINE ACTUATOR VALVE	4	MOOG 31	MOOG	500	2000
43	Propulsion	UNION - FLARED TUBE	10	AN 815	PARKER	2	20

44	Propulsion	QUICK RELEASE He FILL	1	WIGGINS 6000-8	WIGGINS	200	200
45	Propulsion	He FILL VALVE	4	MAROTTA MV121	MAROTTA	500	2000
46	Propulsion	ACTUATOR CHECK VALVE	4	KOHLER K-1351-4	KOHLER	50	200
47	Propulsion	HE HIGH PRESS. RELIEF VALVE	1		CIRCLE SEAL	300	300
48	Propulsion	FUEL PRESSURIZATION CHECK VALV	1	TELYDYNE 488-4D1-2	TELYDYNE	50	50
49	Propulsion	CENT. SEC. PRESS. CHECK VALVE	1		TELYDYNE	50	50
50	Propulsion	LOX FILL CHECK VALVE	1		CIRCLE SEAL	200	200
51	Propulsion	BALLAST He QUICK RELEASE COUPLI	1	WIGGINS 6000-6	WIGGINS	200	200
52	Propulsion	LOX BOIL - OFF RELIEF VALVE	1	CIRCLE SEAL 512T-12T	CIRCLE SEAL	300	300
53	Propulsion	LOX PRESSURIZATION/VENT VALVE	1	HOOF ML 941	HOOF	1000	1000
54	Propulsion	LOX PRESSURIZATION CHECK VALVE	1		KOHLER	50	50
55	Propulsion	He HIGH PRESSURE MANUAL VALVE	1		REPUBLIC	150	150
56	Propulsion	LOX ABORT SURGE ORIFICE	1		TEI	50	50
57	Propulsion	TAURUS DRAIN PORT	4	WELDED AN 818	TEI	50	200
58	Propulsion	1/4" DIA. TO 3/8" DIA. ADAPTER	5		PARKER	3	15
59	Propulsion	45' BULKHEAD FLARED TUBE	3	AN 837	PARKER	3	9
60	Propulsion	REDUCER - FLARED TUBE	5	AN919	PARKER	3	15
61	Propulsion	GREEN CHECK VALVE COVER, 90'	1	TEI	TEI	100	100
62	Propulsion	FUEL VENT CHECK VALVE	1		TELEDYNE	50	50
63	Propulsion	5/8' DIA. TO 1/4' DIA. ADAPTER	5		PARKER	3	15
64	Propulsion	1/4' DIA. TO 1/2' DIA. ADAPTER	5		PARKER	3	15
65	Propulsion	He FILL CHECK VALVE	1	TELEDYNE 458-4D1-6	TELEDYNE	50	50
66	Propulsion	LR- 101 CHAMBER	4	ROCKETDYNE	ROCKETDYNE	300	1200
67							
68							$25,339
69							
70							

BIBLIOGRAPHY

Apple Computer, Inc., *HyperCard Tm User's Guide,* 1987.

Goodman, D., *The Complete HyperCard Tm Handbook,* Bantam Computer Books, 3rd Edition,1990.

Rubin, C., *The Macintosh Tm Bible Guide to System 7,* Goldstein & Blair, 1991.

Slater, D., *X-3 Vehicle Handbook for the SEALAR Rocket Project,* Truax Engineering Inc., Revision 1.1,1991.

INITIAL DISTRIBUTION LIST

		No. Copies
1.	Defense Technical Information Center Cameron Station Alexandria, Virginia 22304-6145	2
2.	Library, Code 52 Naval Postgraduate School Monterey, California 93943-5002	2
3.	Cdr. Joseph F. Mark, USN HQ USSPACECOM / SPJ3ES STOP 35 Peterson AFB Colorado Springs, Colorado 80914-5003	1
4.	Prof. Michael Melich, Code PH/Mm Naval Postgraduate School Monterey, California 93943-5000	1
5.	Prof. Dan Boger, Code OR/Bo Naval Postgraduate School Monterey, California 93943-5000	1
6.	Prof. Donald A. Lacer, Code CC/La Naval Postgraduate School Monterey, California 93943-5000	1
7.	Mr. Peter Wilhelm Naval Research Laboratory, Code 8000 Washington, D.C. 20375-5000	1
8.	SEALAR Library Naval Research Laboratory, Code 8000 Washington, D.C. 20375-5000	1
9.	SEALAR Program Office Naval Research Laboratory, Code 8000 Washington, D.C. 20375-5000	1
10.	Truax Engineering, Inc. Attn: Sheila Henika and Dan Slater 5925 Farnsworth Court Carlsbad, California 92008	1

Thesis
M34278
c.1

Mark

A prototype multi-media data base for tracking interface relationships and performing cost tradeoffs for the Sea Launch and Recovery (SEALAR) Space Launch System.

Thesis
M34278
c.1

Mark

A prototype multi-media data base for tracking interface relationships and performing cost tradeoffs for the Sea Launch and Recovery (SEALAR) Space Launch System.

DUDLEY KNOX LIBRARY

3 2768 00016558 3